RICE ENGINEERING
105 School Creek Trail | Luxemburg, WI 54217
(P) 920.845.1042 | (F) 920.845.1048

Captiveaire – CASRTU #2 & CASRTU #3

Seismic Curb Design Calculations

Project Location:
California
REI Project # R16-10-233

Prepared for:
Captiveaire - Raleigh, NC
11/21/2016

Design Criteria:

1. Calculations are based on the worst case seismic location factors (with the continental U.S.A.) listed below (per 2015 IBC):
   Ss = 3.701 g **S_{DS} = 2.467 g**
   S_1 = 1.250 g **S_{D1} = 1.250 g**
   Site Soil Classification = D
   Risk Category = II
   z/h=1.0
   ap = 2.5 (Component and Anchor Amplification Factor – Table 13.5-1)
   Rp = 3.0 (Component and Anchor Response Modification Factor – Table 13.5-1)

The structural calculations within this report are not intended to be submitted as project specific structural calculations. However, the details shown in this report provide an acceptable engineered design to resist the anticipated worst case seismic loading conditions per IBC 2015 & ASCE-7/10.

2. Unit information for CASRTU #2 and CASRTU #3 from product data drawing provided by the client
   - **Unit #2 weight = 1,650 lbs**
   - **Unit #3 weight = 2,500 lbs**

3. Code checks for Fans, Equipment, and the attachment thereof are not included in these calculations and are **DESIGNED BY OTHERS.**

4. Curbs are to be constructed from **16 Gauge** galvanized sheet metal; minimum yield strength: **Fy = 33 ksi.**

5. Plate Washers shall be 3"x3"x1/4" thick steel **ASTM A36, Fy = 36 ksi**.

6. Field and shop welding shall be **E70XX or better** to have a minimum tensile strength of **Ft = 70 ksi or better.**

7. Concrete anchors shall be a **wedge** type anchor with the size, embed depth and spacing as per the calculations. Anchors shall be installed per the manufacturer's specifications.

8. Concrete shall be 6" thick, normal weight, cracked concrete with a compressive strength **f'c = 3,000 psi MIN.**

9. Lag Screws shall conform to **ANSI/ASME Standard B18.6.1-1981, minimum bending yield strengths of Fby=45 ksi.** Install as specified in the callouts located in this report.

10. Wood is assumed to be **Spruce-Pine-Fir, SG = 0.42.**

11. Design of material separation to prevent reaction between dissimilar materials **not designed by Rice Engineering Inc.**

Digitally signed by Gustave L. Schmoll
Date: 2016.11.22 07:42:55-06'00'

Disclaimer:

This Certification is limited to the structural seismic design of the curb and anchorage of curb to substrate.

It does NOT include responsibility for:
- Design of the Roof Top Units (RTU's)
- Design of the Roof support system
- Design of material separation to prevent reaction between dissimilar materials.
- Design of air and water infiltration prevention.
- The manufacture, assembly, or installation of the system.
- Quantities of materials or dimensional accuracy of drawings

Engineers Design Approval Stamp:

REGISTERED PROFESSIONAL ENGINEER
GUSTAVE L. SCHMOLL
6131
Exp. 9-30-18
STRUCTURAL
STATE OF CALIFORNIA

11/22/2016

RICE ENGINEERING
105 School Creek Trail | Luxemburg, WI 54217
(P) 920.845.1042 | (F) 920.845.1048

Captiveaire – CASRTU #2 & CASRTU #3

Seismic Curb Design Calculations

Project Location:
California
REI Project # R16-10-233

Prepared for:
Captiveaire - Raleigh, NC
11/21/2016

Page:	Description:	Date:	Revision:
E1-E4	Elevations, Plans, Details	11/18/16	
Unit #3			
1-2	Seismic Load	11/18/16	
3	Seismic Overturning Moment	11/18/16	
4	Resisting Moment	11/18/16	
5	Max. Compression & Tension Force	11/18/16	
6-12	Curb Compression Capacity	11/18/16	
13	Curb Results	11/18/16	
14-15	Anchors to Roof Structure	11/18/16	
16	Steel Bolt Capacity	11/18/16	
17	Steel Plate Washer Capacity	11/18/16	
18-24	Concrete Anchor Capacity	11/18/16	
25	Lag Bolt Capacity	11/18/16	
26	Anchor Result Summary	11/18/16	
27-29	Unit to Curb Connection	11/18/16	
Unit #2			
30	Seismic Load	11/18/16	
31	Seismic Overturning Moment	11/18/16	
32	Resisting Moment	11/18/16	
33	Max. Compression & Tension Force	11/18/16	
R1-R7	Reference Information	11/18/16	

Disclaimer:

This Certification is limited to the structural seismic design of the curb and anchorage of curb to substrate.

It does NOT include responsibility for:

- Design of the Roof Top Units (RTU's)
- Design of the Roof support system
- Design of material separation to prevent reaction between dissimilar materials.
- Design of air and water infiltration prevention.
- The manufacture, assembly, or installation of the system.
- Quantities of materials or dimensional accuracy of drawings

Engineers Design Approval Stamp:

REGISTERED PROFESSIONAL ENGINEER
GUSTAVE L. SCHMOLL
6131
Exp. 9-30-18
STRUCTURAL
STATE OF CALIFORNIA

11/22/2016

Elevations

Detail Ref.

Sheet No: E1

RTUDDDR
REV.#4 10/20/16

ROOFTOP UNIT DOWN DISCHARGE DOWN RETURN

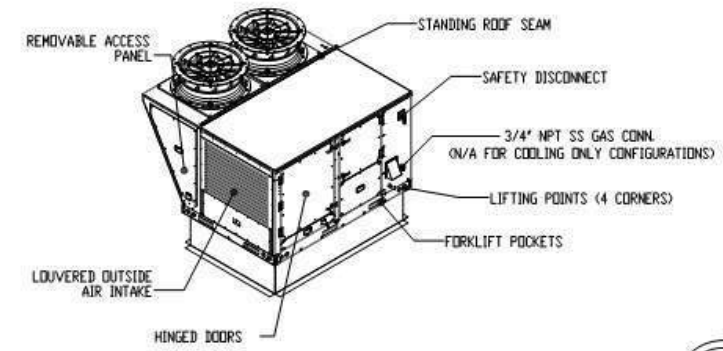

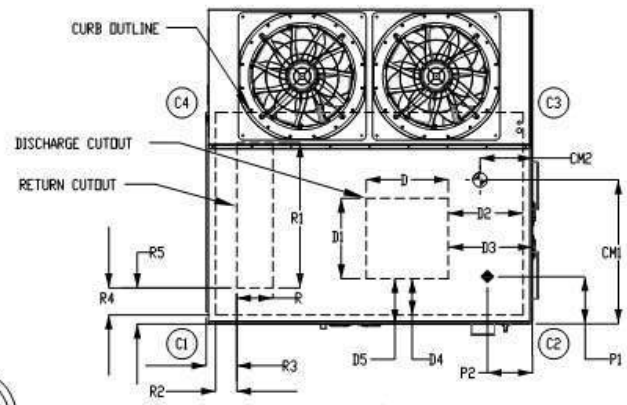

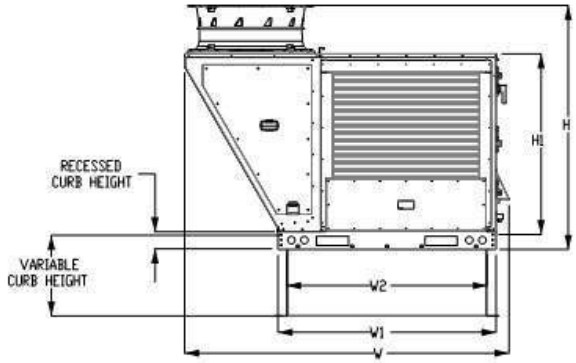

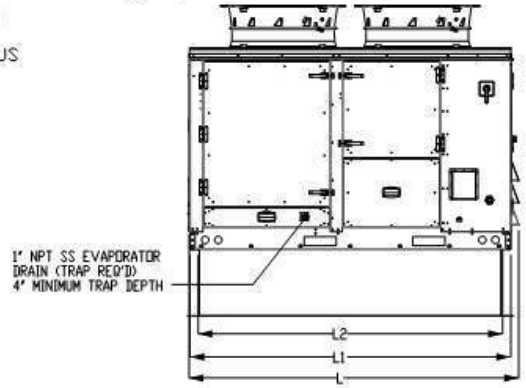

C LISTED US
INTERTEK

NOTES:

1. ROOF OPENING MUST BE 2" SMALLER THAN CURB DIMENSIONS IN BOTH DIRECTIONS
2. DO NOT OBSTRUCT OUTSIDE AIR INLET, OUTSIDE AIR COIL OR OUTSIDE AIR FAN
3. FLOOR MOUNT ISOLATORS LOCATED 1" FROM END OF BASE IN EITHER DIRECTION. ACCOUNT FOR AN ADDITIONAL 5" FOR ISOLATOR HEIGHT
4. QUANTITIES SUBJECT TO CHANGE DEPENDING ON FILTER TYPES
5. ONLY APPLICABLE FOR INDIRECT HEAT OR ELECTRIC HEAT CONFIGURATIONS
6. SUBTRACT 100 LBS. FOR COOLING ONLY CONFIGURATIONS

RTU INFORMATION*

UNIT SIZE	NOMINAL TONNAGE	MAX IEER	INTAKE FILTERS	SUPPLY FILTERS 4	FURNACE CAPACITY (MBH) 5	ELECTRIC CAPACITY (KW) 5	APPROXIMATE WEIGHT (LBS) 6	CENTER OF MASS		CORNER WEIGHTS (LBS)				ENTERING POWER	
								CM1	CM2	C1	C2	C3	C4	P1	P2
2	7	20.2	25 X 20 X 2 (2)	16 X 20 (8)	50 - 200	15 - 60	1650	32	36	441	537	369	303	5 1/4	7 1/4
3	13, 18	18.8	16 X 25 X 2 (4)	25 X 20 (8)	150 - 400	15 - 100	2500	37 1/4	44	472	572	798	658	5 1/2	7 1/2

RTU DIMENSIONS*

UNIT SIZE	UNIT LENGTH (L)	OUTSIDE BASE LENGTH (L1)	INSIDE BASE LENGTH (L2)	UNIT HEIGHT (H)	MOUNTED HEIGHT (H1)	UNIT WIDTH (W)	BASE WIDTH (W1)	INSIDE BASE WIDTH (W2)	RECESSED CURB HEIGHT	DISCHARGE DIMENSIONS						RETURN DIMENSIONS						CURB SIZE
										D	D1	D2	D3	D4	D5	R	R1	R2	R3	R4	R5	
2	81 3/4	79 3/4	75 3/4	60 3/4	45	80 3/4	54	49 3/4	3 1/2	20 1/2	20	19 3/4	22	9	11 1/4	9	36	3 1/4	5 1/2	3 1/4	5 1/2	75 x 49 1/2
3	99	96 3/4	91 3/4	69	52 3/4	89 3/4	65 1/4	60	4	21 1/2	37	20	22 1/2	4 1/4	7 1/4	13 1/2	45 1/2	3 1/2	6 1/4	3	5 1/2	91 x 59 1/2

*ALL DIMENSIONS IN INCHES UNLESS OTHERWISE SPECIFIED

RICE ENGINEERING
105 School Creek Trail
Luxemburg, WI 54217
Phone: (920) 617-1042
Fax: (920) 617-1100
www.rice-inc.com

Project Description:

CASTRU 2 and 3
Seismic Curb

Job No:	R16-10-233		
Engineer:	JGM	Sheet No:	E1
Date:	11/7/16	Rev:	
Chk By:		Date:	

Template: REI-MC-2007

Elevations	Detail Ref.	Sheet No: E2

DOAS/RTU Curb Dimensions

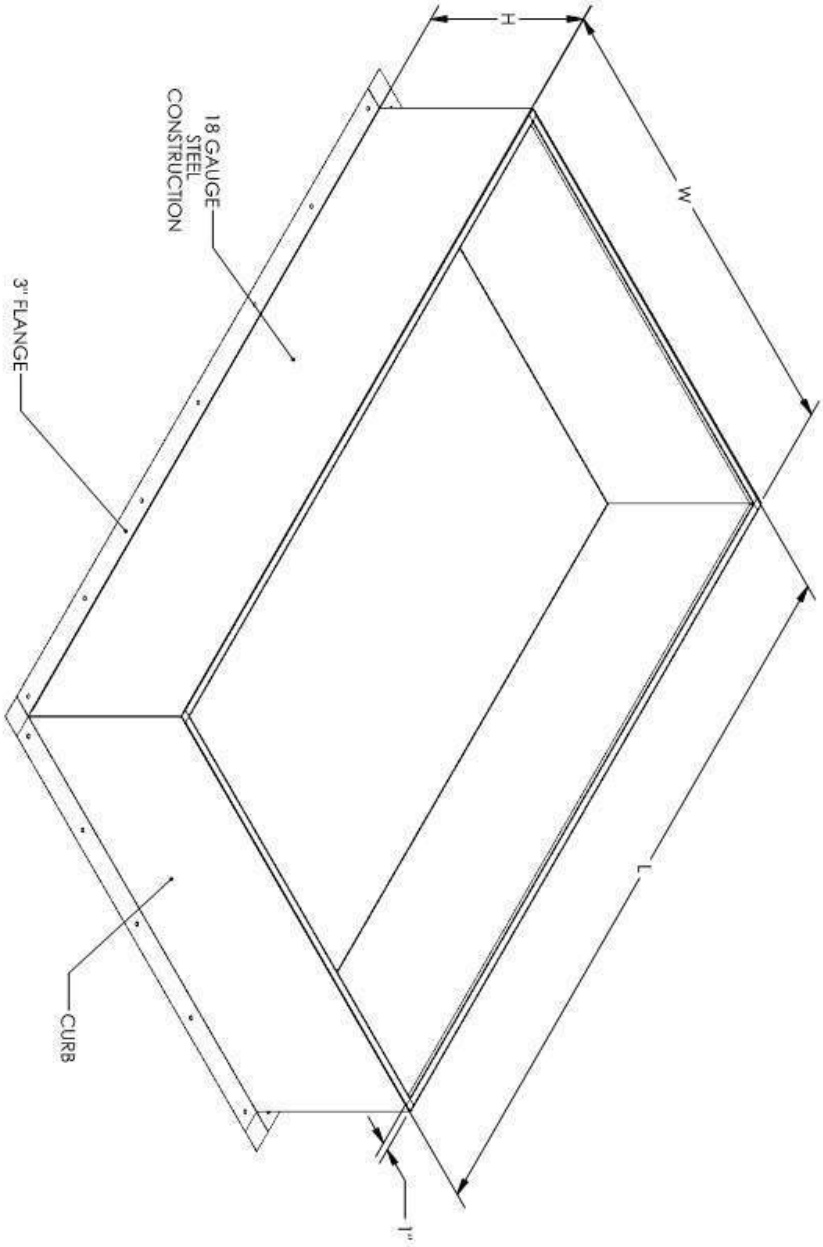

Revision History

#	Description	Revised by	ECN#	Date
0	Release to Production	MAP	2716	

DOAS/RTU Curb Dimensions

	SIZE 2	SIZE 3
H	VARIABLE	VARIABLE
L	75 1/2	91
W	49 1/2	59 1/2

Material: 18 GA Galvanized
Blank Size: N/A
Weight: N/A

Part Number: N/A
MACOLA Number: N/A
Drawing Name: RTU Curb Drawing
Drawn By: MAP
Parent Assembly: RTU
Sheet: 1 of 2

Unless Otherwise Specified Dimensions are in Inches
Standard Tolerances are:
Fractions: ±1/16
Decimal: .XX±.05
.XXX±.015
Angles: ±1°

CONFIDENTIAL

RICE ENGINEERING	105 School Creek Trail Luxemburg, WI 54217 Phone: (920) 617-1042 Fax: (920) 617-1100 www.rice-inc.com	Project Description: **CASTRU 2 and 3 Seismic Curb**	Job No: R16-10-233	
			Engineer: JGM	Sheet No: E2
			Date: 11/7/16	Rev:
Template: REI-MC-2007			Chk By:	Date:

Sheet No: E3

Detail Ref.

Elevations

DOAS/RTU Duct Hanger

Revision History				
#	Description	Revised by	ECN#	Date
0	Release to Production	MAP	2716	

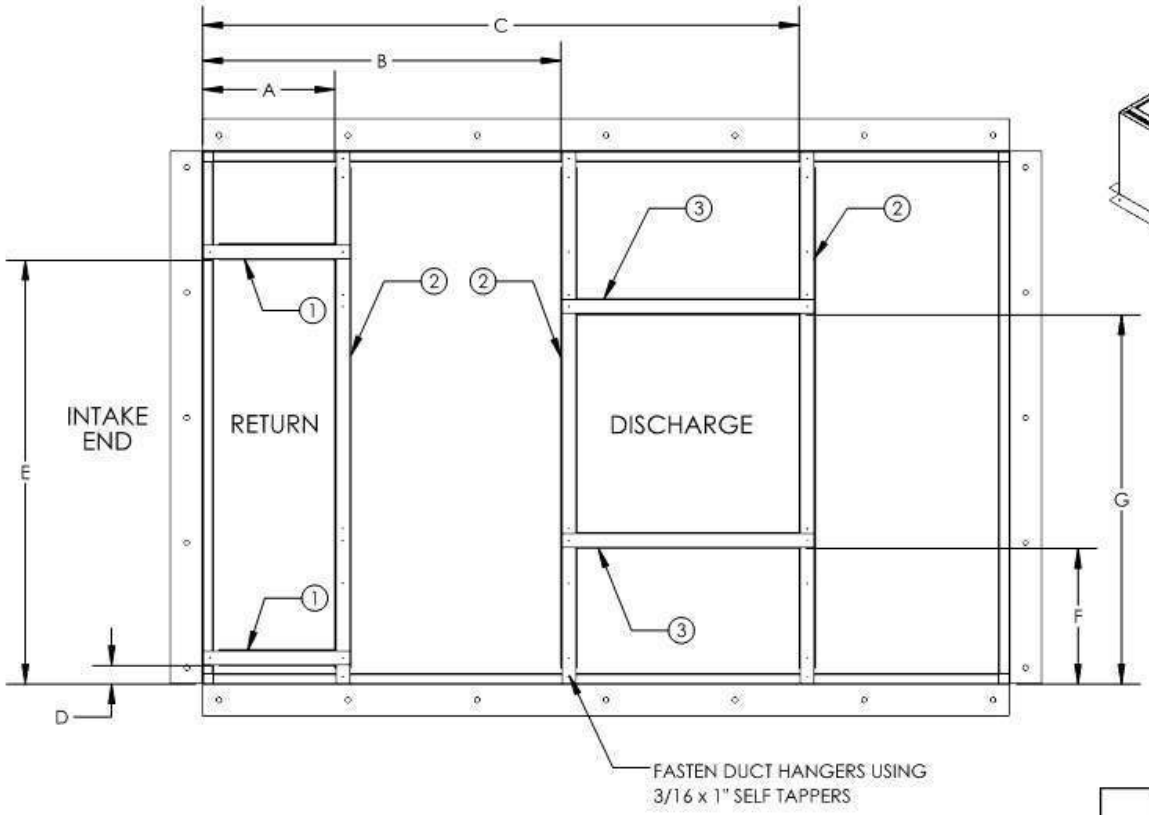

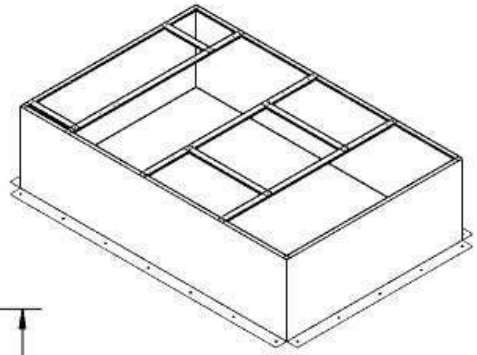

	DOAS/RTU Duct Hanger Bill of Materials			
	SIZE 2		SIZE 3	
	Part Number	Quantity	Part Number	Quantity
1	RTU2DHR	2	RTU3DHR	1
2	RTU2DHL	3	RTU3DHL	3
3	RTU2DHD	2	RTU3DHD	2

	DOAS/RTU Curb Dimensions	
	SIZE 2	SIZE 3
A	12 1/4	16 1/2
B	33 3/8	49 7/8
C	55 1/2	71 7/8
D	1 3/4	N/A
E	39 1/2	48 3/8
F	12 5/8	2 7/8
G	34 3/8	41 1/2

Material: N/A
Blank Size: N/A
Weight: N/A

CONFIDENTIAL

Part Number: N/A
MACOLA Number: N/A
Drawing Name: RTU Curb Drawing
Drawn By: MAP
Parent Assembly: RTU
Sheet: 2 of 2

Unless Otherwise Specified Dimensions are in Inches.
Standard Tolerances are:
Fractions: ±1/16
Decimal: .XX±.05
.XXX±.015
Angles: ±1°

Job No: R16-10-233
Engineer: JGM
Sheet No: E3
Date: 11/7/16
Rev:
Chk By:
Date:

Project Description:
CASTRU 2 and 3 Seismic Curb

105 School Creek Trail
Luxemburg, WI 54217
Phone: (920) 617-1042
Fax: (920) 617-1100
www.rice-inc.com

RICE ENGINEERING

Template: REI-MC-2007

Washer	Detail Ref.	Sheet No: E4

Rooftop Curb Attachment Plate

Steel Support Block, 3" x 3" by .250" Thick steel plate and galvanized for weather resistance.

Part number for the plate is 91133A140 (Macola# A0017326)

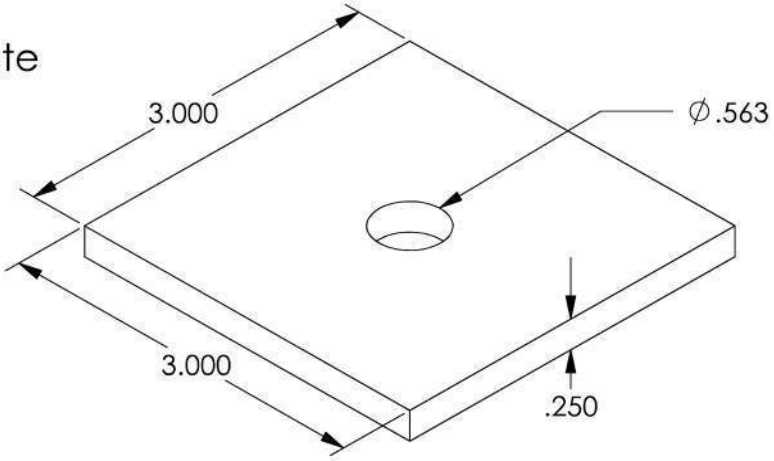

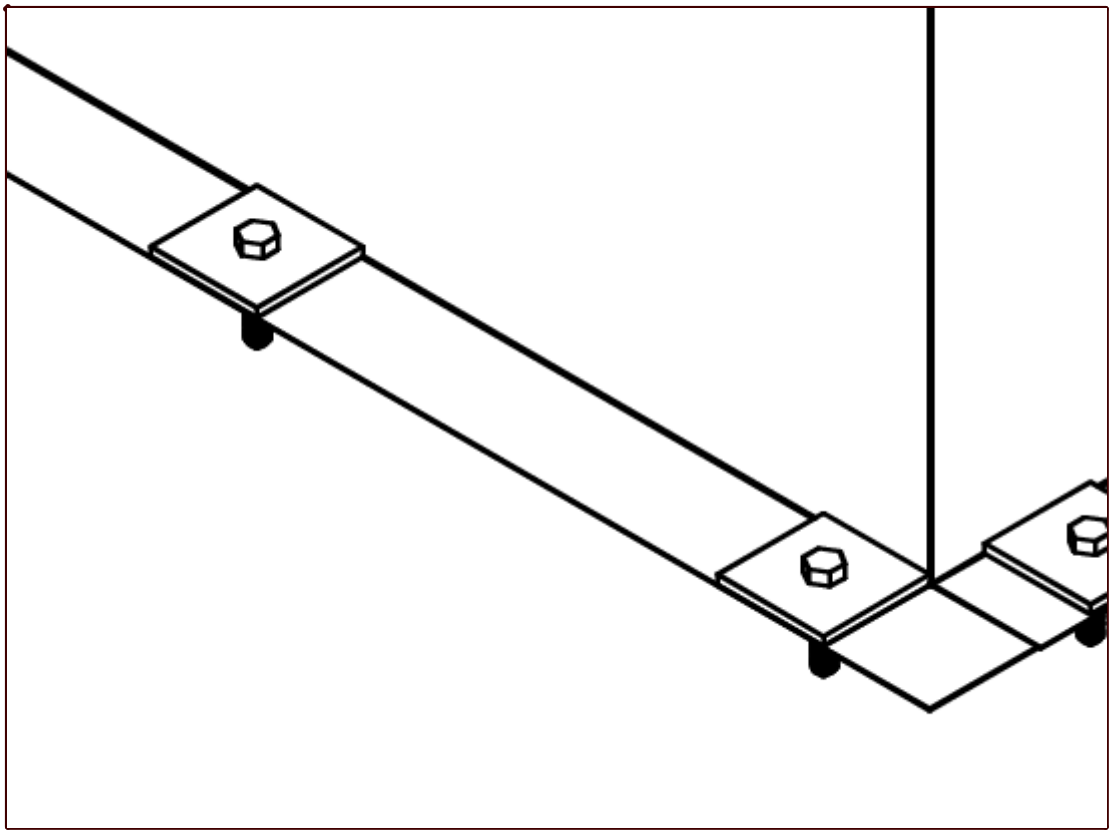

RICE ENGINEERING Template:	105 School Creek Trail Luxemburg, WI 54217 Phone: (920) 617-1042 Fax: (920) 617-1100 www.rice-inc.com	Project Description: **CASTRU 2 and 3 Seismic Curb**	Job No: R16-10-233	
			Engineer: JGM	Sheet No: E4
			Date: 11/7/16	Rev:
			Chk By:	Date:

Seismic Unit #3 (USA)	Detail Ref.	Sheet No:

Inputs:

Seismic Design Force for Non-Structural Components: (CH. 13 ASCE 7-10):

$S_s := 370\%$ Mapped Spectral Response Acceleration at Short Periods (Figure 22-1)

$S_1 := 125\%$ Mapped Spectral Response Acceleration at Long Periods (Figure 22-2)

SSC = > D Soil Site Class (Assume Site Class "D" if Unknown per Section 20.1)

RC = > II Risk Category (Table 1.5-1)

MECHANICAL AND ELECTRICAL COMPONENTS	a_p[a]	R_p[b]
Roof-mounted stacks, cooling and electrical towers laterally braced below their center of mass.	2 ½	3

$a_p := 2.5$ Component and Anchor Amplification Factor (Table 13.5-1)

$R_p := 3$ Component and Anchor Response Modification Factor (Table 13.5-1)

$z := 1$ Height in Structure of Point of Attachment of Component With Respect to Base

$h := 1$ Average Roof Height of Structure With Respect to the Base

$W_p := 2500$ lbs. (Max. Weight of Component)

Calculations:

All Calculations Below This Line Are Automatic

$\rho := 1.0$ Redundancy Factor (See Section 12.3.4)

$F_a = 1.00$ Short-Period Site Coefficient (Table 11.4-1)

$F_v = 1.50$ Long-Period Site Coefficient (Table 11.4-2)

$S_{DS} := (2 \div 3) \cdot F_a \cdot S_s = 247 \cdot \%$ Design Spectral Response Acceleration at Short Period (Eqn 11.4-3)

$S_{D1} := (2 \div 3) \cdot F_v \cdot S_1 = 125 \cdot \%$ Design Spectral Response Acceleration At Long Period (Eqn 11.4-4)

$I_p = 1$ Component Importance Factor (See Section 13.1.3)

$$f_p := \frac{0.4 \cdot a_p \cdot S_{DS}}{R_p \div I_p} \cdot \left[1 + \left[2 \cdot \left(\frac{z}{h}\right)\right]\right] = 2.47$$ (Eqn 13.3-1 with W_p Excluded)

$F_{pmin} := 0.3 \cdot S_{DS} \cdot I_p = 0.74$ (Eqn 13.3-3)

$F_{pmax} := 1.6 \cdot S_{DS} \cdot I_p = 3.95$ (Eqn 13.3-2)

$$F_{punit} := \begin{cases} F_{pmin} & \text{if } f_p < F_{pmin} \\ F_{pmax} & \text{if } f_p > F_{pmax} \\ f_p & \text{otherwise} \end{cases} = 2.47$$

$F_{punit} = 2.47$ Unfactored Unit Seismic Lateral Force

$F_{pvunit} := 0.2 \cdot S_{DS} = 0.49$ Unfactored Unit Seismic Vertical Force

$F_p := F_{punit} \cdot W_p \cdot unit = 42.82$ psi Unfactored Seismic Lateral Force

$D := W_p \cdot unit = 17.36$ psi Unfactored Component Dead Loads

Seismic Design Category (SDC) per ASCE 7 Section 11.6 SDC = "E"

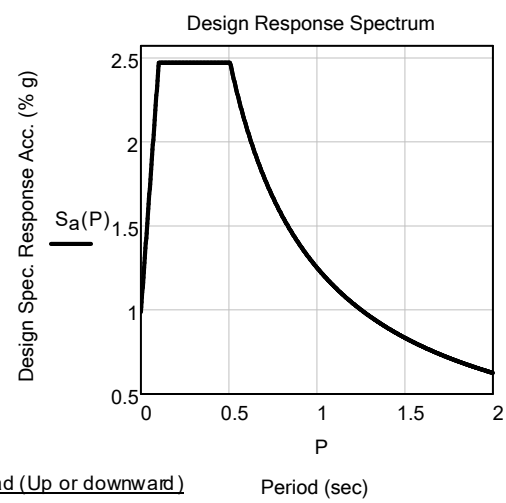

Seismic Forces on Component/Anchors

	Seismic Lateral Load	Seismic Vertical Load (Up or downward)
ASD:	$E_{hASD} := 0.7 \rho \cdot F_{punit} \cdot W_p = 4316.67$ lbs	$E_{vASD} := 0.7(0.2 \cdot S_{DS}) \cdot W_p = 863.33$ lbs
LRFD:	$E_{hLRFD} := \rho \cdot F_{punit} \cdot W_p = 6166.67$ lbs	$E_{vLRFD} := (0.2 \cdot S_{DS}) \cdot W_p = 1233.33$ lbs

RICE ENGINEERING	105 School Creek Trail Luxemburg, WI 54217 Phone: (920)845-1042 Fax: (920)845-1048 www.rice-inc.com	Project Description:	Job No: R16-10-233	
		CASTRU 2 and 3 Seismic Curb	Engineer: JGM	Sheet No: 1
			Date: 11/7/16	Rev:
Template: REI-MC-1040			Chk By:	Date:

USGS Design Maps Summary Report

User–Specified Input

Report Title	Captive Air - RTU Units Thu November 10, 2016 15:45:50 UTC
Building Code Reference Document	2012/2015 International Building Code (which utilizes USGS hazard data available in 2008)
Site Coordinates	34.45°N, 118.85°W
Site Soil Classification	Site Class D – "Stiff Soil"
Risk Category	I/II/III

USGS–Provided Output

S_S =	3.701 g	S_{MS} =	3.701 g	S_{DS} =	2.467 g
S_1 =	1.250 g	S_{M1} =	1.875 g	S_{D1} =	1.250 g

For information on how the SS and S1 values above have been calculated from probabilistic (risk-targeted) and deterministic ground motions in the direction of maximum horizontal response, please return to the application and select the "2009 NEHRP" building code reference document.

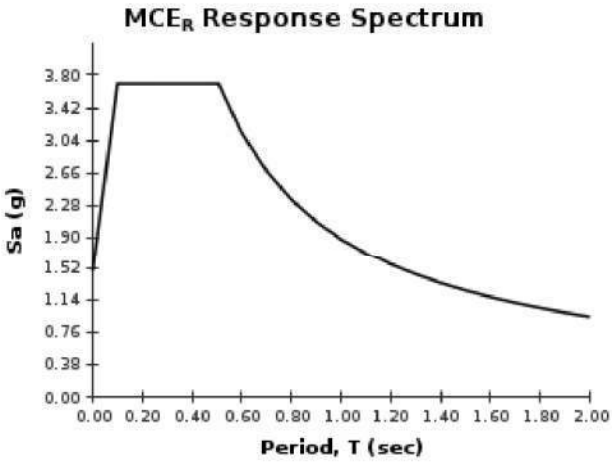

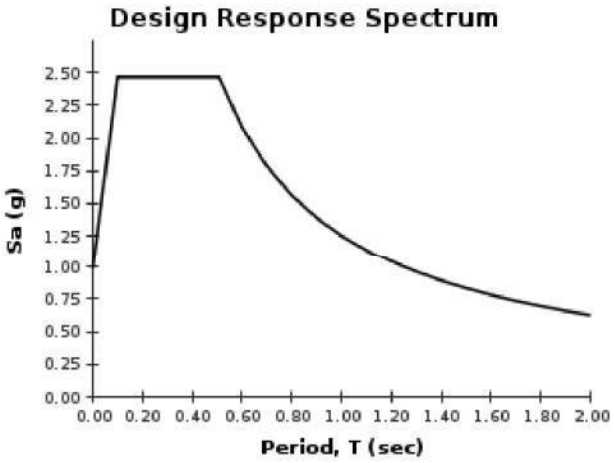

UNIT #3 – SEISMIC LOAD (CONT.)

SEISMIC RESULTS

$E_{H3} = 4,317^{\#}$ (HORIZONTAL)
$E_{V3} = \pm 863^{\#}$ (VERTICAL)

} FROM UNIT #3 SEISMIC RESULTS

CALCULATE SEISMIC OVERTURNING MOMENTS

NOTE:

IT IS ASSUMED THE VETICAL CENTER OF GRAVITY (C.O.G.) AT MID-HEIGHT AND SEISMIC LOAD WILL BE APPLIED AT MID-HEIGHT

$H1 = 52.75''$ - UNIT HEIGHT
$+ \ 4''$ - RECESSED CURB HEIGHT
$H_T = 56.75''$

$$M_E = (4,317^{\#})\left(\frac{56.75''}{2}\right)$$

$$M_E = 122,495 \text{ IN.}^{\#}$$

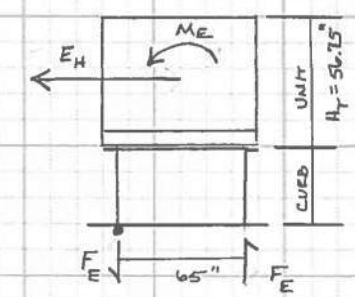

CONVERT TO FORCE COUPLE

$x = 65''$ (SHORT DIRECTION WILL CONTROL)

$$F_E = \frac{M_E}{x} = \frac{122,495 \text{ IN.}^{\#}}{65 \text{ IN}}$$

$$F_E = \pm 1,885^{\#}$$ (TENSION OR COMPRESSION)

UNIT #3 – SIESMIC LOAD (CONT.)

CALCULATE RESISTING MOMENT

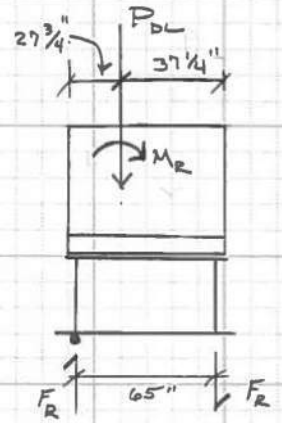

$P_{DL} = 2{,}500^{\#}$

- USING FULL 1.0 DL

$M_{R_1} = 2{,}500^{\#}(27.75^{IN})$

$M_{R_1} = 69{,}375^{IN\cdot\#}$

CONVERT TO FORCE COUPLE

$F_{R_1} = \frac{69{,}375^{IN\cdot\#}}{65^{IN}}$

$F_{R_1} = 1{,}067^{\#}$ (MAXIMUM RESISTANCE)

- USING 0.60 DL

$M_{R2} = 0.6(2500^{\#})(27.75^{IN})$

$M_{R2} = 41{,}625^{IN\cdot\#}$

CONVERT TO FORCE COUPLE

$F_{R2} = \frac{41{,}625^{IN\cdot\#}}{65^{IN}}$

$F_{R2} = 640^{\#}$ (MINIMUM RESISTANCE)

LOAD COMBINATIONS

#5) 1.0 DL + 0.7E
#8) 0.6 DL + 0.7E

(PER ASCE 7-10 SECTION 2.4.1)

UNIT # 3 - SEISMIC LOAD (CONT.)

CALCULATE MAX. COMPRESSION AND TENSION (AT TOP OF CURB)

COMPRESSION

- FOR $1.0\,DL + 0.7E_H + E_V$

NOTE:
- F_E HAS 0.7 REDUCTION INCLUDED

$$R_{C_1} = \frac{F_E - F_{R_1}}{2 \text{ CORNERS}} + E_V + P_{DL(MAX)}$$

RATIO E_V BY CORNER DL

$$= \frac{1{,}885^{\#} - 1{,}067^{\#}}{2} + 863^{\#}\left(\frac{798^{\#}}{2500^{\#}}\right) + 798^{\#}$$

$$R_{C_1} = 1{,}482^{\#}$$ ⟸ CONTROLS (COMPRESSION)

- FOR $0.6\,DL + 0.7E + E_V$

UNIT CORNER DL

$P_{DL(MAX)} = 798^{\#}$
$P_{DL(MIN)} = 472^{\#}$
PER UNIT CUT SHEET

$$R_{C2} = \frac{F_E - F_{R2}}{2 \text{ CORNERS}} + 0.6P_{DL(MAX)} + E_V$$

$$= \frac{1{,}885^{\#} - 640^{\#}}{2} + 0.6(798^{\#}) + 863^{\#}\left(\frac{798}{2500}\right)$$

$$R_{C2} = 1{,}376^{\#}$$

TENSION

- FOR $0.6\,DL + 0.7E$ (COMBO WILL CONTROL FOR TENSION)

$$R_T = \frac{F_E - F_{R2}}{2 \text{ CORNERS}} - 0.6P_{DL(MIN)} + E_V$$

$$\frac{1{,}885^{\#} - 640^{\#}}{2} - 0.6(472^{\#}) + 863^{\#}\left(\frac{472^{\#}}{2500^{\#}}\right)$$

$$R_T = 502^{\#} \text{ (TENSION)}$$

INPUTS:

Corner of Curb in Compression	Detail Ref.	Sheet No:

Angle || Custom

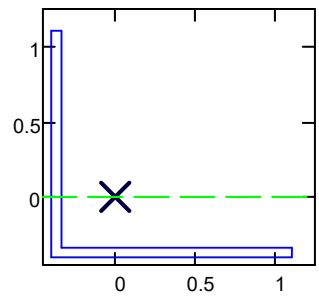

Shape =

	0	1	2
0	"Angle"	0	0
1	"Depth = "	1.5	"in."
2	"Width = "	1.5	"in."
3	"Thickness = "	0.0635	"in."
4	"x.bar.right = "	1.101	"in"
5	"x.bar.left = "	0.399	"in"
6	"y.bar.top = "	1.101	"in"
7	"y.bar.bottom = "	0.399	"in"
8	"Area :"	0.18647	"in^2"
9	"I.x :"	0.04193	"in^4"
10	"I.y :"	0.04193	"in^4"
11	"ALPHA :"	0.7854	"rad."
12	"Iz :"	0.01683	"in^4"
13	"Iw :"	0.06703	"in^4"
14	"S.x.Top :"	0.03807	"in^3"
15	"S.x.Bot :"	0.10518	"in^3"
16	"S.y.right :"	0.03807	"in^3"
17	"S.y.left :"	0.10518	"in^3"
18	"S.z.heal :"	0.02985	"in^3"
19	"S.z.toes :"	0.03106	"in^3"
20	"y.lowerRight :"	0.06319	"in^3"
21	"w.upperLeft :"	0.06319	"in^3"
22	"r.x :"	0.47419	...

Section Properties

$b_l := Shape_{1,1} \cdot in = 1.5\,in$ — Longer Leg of Angle

$b_s := Shape_{2,1} \cdot in = 1.5\,in$ — Shorter Leg of Angle

$t := Shape_{3,1} \cdot in = 0.06\,in$ — Thickness of Angle

$A_g := Shape_{8,1} \cdot in^2 = 0.19 \cdot in^2$ — Gross Area of Member

Coordinates of shear center with respect to the centroid

$x_o := \left(Shape_{5,1} - 0.5 \cdot Shape_{3,1}\right) \cdot in = 0.37\,in$ (x-axis)

$y_o := \left(Shape_{7,1} - 0.5 \cdot Shape_{3,1}\right) \cdot in = 0.37\,in$ (y-axis)

$I_x := Shape_{9,1} \cdot in^4 = 0.04 \cdot in^4$ — Moment of intertia about x-axis

$I_y := Shape_{10,1} \cdot in^4 = 0.04 \cdot in^4$ — Moment of intertia about y-axis

$r_x := Shape_{22,1} \cdot in = 0.47\,in$ — Radius of gyration about x-axis

$r_y := Shape_{23,1} \cdot in = 0.47\,in$ — Radius of gyration about y-axis

$r_z := Shape_{24,1} \cdot in = 0.3\,in$ — Radius of gyration about z-axis

$J := Shape_{26,1} \cdot in^4 = 0.00025 \cdot in^4$ — Torsional Constant

$C_w := Shape_{28,1} \cdot in^6 = 0.00005 \cdot in^6$ — Warping Constant

Material Properties

$G \equiv 11200 \cdot ksi$ — Shear Modulus of Elasticity

$E \equiv 29000 \cdot ksi$ — Modulus of Elasticity

$F_y \equiv 33000 \cdot psi$ — Yield Strength

Column Parameters

$L \equiv 36in$ — Length of Column

$K_x \equiv 1.0$ — Effective length factor for torsional buckling about x-axis

$K_y \equiv 1.0$ — Effective length factor for torsional buckling about y-axis

$K_z \equiv 1.0$ — Effective length factor for torsional buckling about z-axis

NOTE: Single angle members with different end conditions from those described in Section E5(a) or (b), with leg length ratios greater than 1.7, or with transverse loading shall be evaluated for combined axial load and flexure using the provisions of Chapter H. End connection to different legs on each end or to both legs, the use of single bolts or the attachment of adjacent web members to opposite sides of the gusset plate or chord shall constitute different end conditions requiring the use of Chapter H provisions. (NOTE: Chapter H is the *Design of Members for Combined Forces and Torsion*)

Web Members of Box or Space Trusses with Adjacent Web Members Attached to the Same Side of the Gusset Plate or Chord

Desc = "Web Members of Box or Space Trusses with Adjacent Web Members Attached to the Same Side of the Gusset Plate or Chord"

E5-Section = "b"

Connected Through LONGER Leg

ConnDesc = "Connected Through LONGER Leg"

Connection = "LONG"

If Connecting throught SHORTER or LONGER Leg, Verify that:

(1) members are loaded at the ends in compression through the same one leg;
(2) members are attached by welding or by minimum two-bolt connections; &
(3) there are no intermediate transverse loads.
(4) $"\left(b_l \div b_s, "<", 1.7\right) = "1 \le 1.7 \;\therefore\; PASS"$

E2, EFFECTIVE LENGTH

$r := \min(r_x, r_y, r_z) = 0.3\text{in}$ Radius of gyration

$K \equiv \min(K_x, K_y, K_z) = 1$ Effective length factor for torsional buckling

$(KL/r) := (K \cdot L) \div r = 119.84$

E5, SINGLE ANGLE COMPRESSION MEMBERS

The nominal compressive strength, P.n, of single angle members shall be determined in accordance with Section E3 or Section E7, as appropriate, for axially loaded members, as well as those subject to the slenderness modification of Section E5(a) or E5(b), provided the members meet the criteria imposed.

The Effects of eccentricity on single angle members are permitted to be neglected when the members are evaluated as axially loaded compression members using one of the effective slenderness ratios specified below, provided that: (1) members are loaded at the ends in compression through the same one leg; (2) members are attached by welding or by minimum two-bolt connections; and (3) there are no intermediate transverse loads.

(c) Single angle members with different end conditions from those described in Section E5(a) or (b), with leg length ratios greater than 1.7, or with transverse loading shall be evaluated for combined axial load and flexure using the provisions of Chapter H. End connection to different legs on each end or to both legs, the use of single bolts or the attachment of adjacent web members to opposite sides of the gusset plate or chord shall constitute different end conditions requiring the use of Chapter H provisions. (NOTE: Chapter H is the *Design of Members for Combined Forces and Torsion*)

(a) For equal-leg angles or unequal-leg angles connected through the longer leg that are individual members or are web members of planar trusses with adjacent web members attached to the same side of the gusset plate or chord:

(i) When $"\left(\frac{L}{r_x}, "<", 80\right) = "75.92 \le 80 \ \therefore \text{PASS}"$:

$(KL/r)_{(E5\text{-}1)} := 72 + 0.75 \cdot \frac{L}{r_x} = 128.94$ ..... (E5-1)

$USE_{(E5\text{-}1)} := \frac{L}{r_x} \le 80 = 1$ ..... → "TRUE"

(ii) When $"\left(\frac{L}{r_x}, ">", 80\right) = "75.92 \le 80 \ \therefore \text{!!FAIL!!}"$:

$(KL/r)_{(E5\text{-}2)} := \min\left(32 + 1.25 \cdot \frac{L}{r_x}, 200\right) = 126.9$ ..... (E5-2)

$USE_{(E5\text{-}2)} := \frac{L}{r_x} > 80 = 0$ ..... → "FALSE"

$(KL/r)_{(E5\text{-}a)} := (KL/r)_{(E5\text{-}1)} \cdot USE_{(E5\text{-}1)} + (KL/r)_{(E5\text{-}2)} \cdot USE_{(E5\text{-}2)} = 128.94$ .....(K*L/r) After Modification #1

For unequal-leg angles with leg length ratios less than 1.7 $"(b_l \div b_s, "<", 1.7) = "1 \le 1.7 \ \therefore \text{PASS}"$ **and connected through the shorter leg, KL/r from Equations E5-1 and E5-2 shall be increased by adding** $4 \cdot \left[\left(b_l \div b_s\right)^2 - 1\right] = 0$ **, but KL/r of the members shall not be less than** $0.95 \cdot L \div r_z = 113.85$ **.**

$(KL/r)_{(E5\text{-}a)'} := \max\left[(KL/r)_{(E5\text{-}a)} + \left[\left(\frac{b_l}{b_s} < 1.7\right) \wedge (\text{Connection} = "\text{SHORT}")\right] \cdot \left[4 \cdot \left[\left(\frac{b_l}{b_s}\right)^2 - 1\right]\right], \frac{0.95 \cdot L}{r_z}\right] = 128.94$ .....(K*L/r) After Modification #2

$USE_{(KL/r).(E5\text{-}a)} := \text{E5-Section} = "a" = 0$ ..... → "FALSE"

(b) For equal-leg angles or unequal-leg angles connected through the longer leg that are web members of box or space trusses with adjacent web members attached to the same side of the gusset plat or chord:

(i) When $"\left(\frac{L}{r_x}, "<", 75\right) = "75.92 \ge 75 \ \therefore \text{!!FAIL!!}"$:

$(KL/r)_{(E5\text{-}3)} := 60 + 0.8 \cdot \frac{L}{r_x} = 120.74$ ..... (E5-3)

$USE_{(E5\text{-}3)} := \frac{L}{r_x} \le 80 = 1$ ..... → "TRUE"

(ii) When $"\left(\frac{L}{r_x},">",75\right) = "75.92 \geq 75 \ \therefore \text{PASS}"$:

$(KL/r)_{(E5\text{-}4)} := \min\left(45 + \frac{L}{r_x}, 200\right) = 120.92$ ..... (E5-4)

$USE_{(E5\text{-}4)} := \frac{L}{r_x} > 80 = 0$ ..... → "FALSE"

$(KL/r)_{(E5\text{-}b)} := (KL/r)_{(E5\text{-}3)} \cdot USE_{(E5\text{-}3)} + (KL/r)_{(E5\text{-}4)} \cdot USE_{(E5\text{-}4)} = 120.74$ .....(K*L/r) After Modification #1

For unequal-leg angles with leg length ratios less than 1.7 ($"\left(b_l \div b_s,"<",1.7\right) = "1 \leq 1.7 \ \therefore \text{PASS}"$ **) and connected through the shorter leg, KL/r from Equations E5-3 and E5-4 shall be increased by adding** $6\cdot\left[\left(b_l \div b_s\right)^2 - 1\right] = 0$ **, but KL/r of the members shall not be less than** $0.82\cdot L \div r_z = 98.27$ **.**

$(KL/r)_{(E5\text{-}b)'} := \max\left[(KL/r)_{(E5\text{-}b)} + \left[\left(\frac{b_l}{b_s} < 1.7\right) \wedge (\text{Connection} = "\text{SHORT}")\right]\cdot\left[6\cdot\left[\left(\frac{b_l}{b_s}\right)^2 - 1\right]\right], \frac{0.82\cdot L}{r_z}\right] = 120.74$ .....(K*L/r) After Modification #2

$USE_{(KL/r).(E5\text{-}b)} := \text{E5-Section} = "b" = 1$ ..... → "TRUE"

Thus:

$(KL/r)_{(E5)} := USE_{(KL/r).(E5\text{-}a)}\cdot(KL/r)_{(E5\text{-}a)'} + USE_{(KL/r).(E5\text{-}b)}\cdot(KL/r)_{(E5\text{-}b)'} = 120.74$ .....(K*L/r) After Section E5

$(KL/r)_{(E5)} = 120.74$

$KL/r := (KL/r)_{(E5)}\cdot(\text{Connection} = "\text{SHORT}" \vee \text{Connection} = "\text{LONG}") + (KL/r)\cdot(\text{Connection} = "\text{CENTRE}") = 120.74$ Slenderness Ratio

$b := \max(b_s, b_l) = 1.5\,in$

$t = 0.06\,in$

$USE_{(Section\text{-}E3)} := "\left(\frac{b}{t},"<",0.45\cdot\sqrt{\frac{E}{F_y}}\right) = "23.62 \geq 13.34 \ \therefore \text{!!FAIL!!}"$ W/O SLENDER ELEMENTS (Flexural Buckling)

$USE_{(Section\text{-}E4)} := "\left(\frac{b}{t},">",20\right) = "23.62 \geq 20 \ \therefore \text{PASS}"$ W/O SLENDER ELEMENTS (Torsional Buckling) *(per 14th Edition)*

$USE_{(Section\text{-}E7)} := "\left(\frac{b}{t},">",0.45\cdot\sqrt{\frac{E}{F_y}}\right) = "23.62 \geq 13.34 \ \therefore \text{PASS}"$ SLENDER ELEMENTS

E3, FLEXURAL BUCKLING OF MEMBERS WITHOUT SLENDER ELEMENTS

This section applies to compression members with compact and noncompact sections, as defined in Section B4, for uniformly compressed elements

Given:

$F_{e(E3\text{-}4)} := \frac{\pi^2\cdot E}{KL/r^2} = 19634.8\,psi$ ..... *Elastic critical buckling stress* ..... (E3-4)

Then:

(a) When $"\left(KL/r,"<",4.71\cdot\sqrt{\frac{E}{F_y}}\right) = "120.74 \leq 139.62 \ \therefore \text{PASS}"$

$F_{cr(E3\text{-}2)} := \left[0.658^{\left(F_y \div F_{e(E3\text{-}4)}\right)}\right]\cdot F_y = 16330.82\,psi$ ..... (E3-2)

$USE_{(E3\text{-}2)} := (KL/r) \leq 4.71\cdot\sqrt{\frac{E}{F_y}} = 1$ ..... → "TRUE"

(b) When $\text{"}\left(KL/r\text{ ,">" ,}4.71\cdot\sqrt{\frac{E}{F_y}}\right) = \text{"120.74} \le 139.62 \;\therefore\; \text{!!FAIL!!"}$

$F_{cr(E3\text{-}3)} := 0.877\cdot F_{e(E3\text{-}4)} = 17219.72\,psi$ ..... (E3-3)

$USE_{(E3\text{-}3)} := KL/r > 4.71\cdot\sqrt{\frac{E}{F_y}} = 0$ ..... → "FALSE"

Therefore:

$F_{cr(E3\text{-}1)} := USE_{(E3\text{-}2)}\cdot F_{cr(E3\text{-}2)} + USE_{(E3\text{-}3)}\cdot F_{cr(E3\text{-}3)} = 16330.82\,psi$ .....Flexural Buckling Stress

Thus:

The *nominal compressive strength*, P_n, shall be determined based on the *limit state* of *flexural buckling*

$P_{n(E3\text{-}1)} := F_{cr(E3\text{-}1)}\cdot A_g = 3045.17\,lbf$ ..... (E3-1)

$USE_{(Section\text{-}E3)} = 0$ ..... → "FALSE"

$USE_{(Section\text{-}E3)}\cdot P_{n(E3\text{-}1)} = 0$

E4, TORSIONAL AND FLEXURAL-TORSIONAL BUCKLING OF MEMBERS WITHOUT SLENDER ELEMENTS

This section applies to singly symmetric and unsymmetric members, and certain doubly symmetric members, such as cruciform or built-up columns with compact and non-compact sections, as defined in Section B4 for uniformly compressed elements. These provisions are required for single angles with b/t > 20 (per 14th Edition)

Given:

$\left[\left(\overline{r_o}\right)^2\right] := x_o^2 + y_o^2 + \frac{I_x + I_y}{A_g} = 0.72\,in^2$ ..... (E4-7)

$H := 1 - \frac{x_o^2 + y_o^2}{\left[\left(\overline{r_o}\right)^2\right]} = 0.63$ ..... (E4-8)

$F_{ex} := \frac{\pi^2\cdot E}{\left(KL/r\cdot\frac{r}{r_x}\right)^2} = 48922.52\,psi$ ..... (E4-9)

$F_{ey} := \frac{\pi^2\cdot E}{\left(KL/r\cdot\frac{r}{r_y}\right)^2} = 48922.52\,psi$ ..... (E4-10)

$F_{ez} := \left[\frac{\pi^2\cdot E\cdot C_w}{[(KL/r)\cdot(r)]^2} + G\cdot J\right]\cdot\frac{1}{A_g\cdot\left[\left(\overline{r_o}\right)^2\right]} = 21001.83\,psi$ ..... (E4-11)

Then:

(b) For all other cases, F_{cr} **shall be determined according to Equation E3-2 or E3-3, using the torsional or flexural-torsional elastic buckling stress,** F_e**, determined as follows:**

(iii) For unsymmetric, F_e *is the lowest root of the cubic equation:*

$$\left[\overline{r_o}\right] := \sqrt{\left[\left(\overline{r_o}\right)^2\right]} = 0.85\,\text{in}$$

$$(E4\text{-}6)(F_e) := \left(F_e - \frac{F_{ex}}{psi}\right)\cdot\left(F_e - \frac{F_{ey}}{psi}\right)\cdot\left(F_e - \frac{F_{ez}}{psi}\right) - F_e^2\cdot\left(F_e - \frac{F_{ey}}{psi}\right)\cdot\left[\frac{x_o^2}{\left[\left(\overline{r_o}\right)^2\right]}\right] - F_e^2\cdot\left(F_e - \frac{F_{ex}}{psi}\right)\cdot\left[\frac{y_o^2}{\left[\left(\overline{r_o}\right)^2\right]}\right] \quad \text{..... (E4-6)}$$

$$C_{(E4\text{-}6)} := (E4\text{-}6)(_x)\ \text{coeffs}, _x \rightarrow \begin{pmatrix} -5.03\times 10^{13} \\ 4448337183.47 \\ -100504.21 \\ 0.63 \end{pmatrix} \qquad \text{polyroots}\left(C_{(E4\text{-}6)}\right) = \begin{pmatrix} 17400.5 \\ 48922.52 \\ 94466.41 \end{pmatrix}$$

$$F_{e(E4\text{-}b)} := psi\cdot\min\left(\text{polyroots}\left(C_{(E4\text{-}6)}\right)\right) = 17400.5\,psi$$

E3(a) When $\text{"}\left(KL/r, \text{"<"}, 4.71\cdot\sqrt{\frac{E}{F_y}}\right) = \text{"}120.74 \le 139.62\ \therefore \text{PASS"}$

$$F_{cr.(E4\text{-}b).(E3\text{-}2)} := \left[0.658^{\left(F_y \div F_{e(E4\text{-}b)}\right)}\right]\cdot F_y = 14920.38\,psi \quad \text{..... (E3-2)}$$

$$USE_{(E4\text{-}b).(E3\text{-}2)} := (KL/r) \le 4.71\cdot\sqrt{\frac{E}{F_y}} = 1 \quad \text{..... } \rightarrow \text{"TRUE"}$$

E3(b) When $\text{"}\left(KL/r, \text{">"}, 4.71\cdot\sqrt{\frac{E}{F_y}}\right) = \text{"}120.74 \le 139.62\ \therefore \text{!!FAIL!!"}$

$$F_{cr.(E4\text{-}b).(E3\text{-}3)} := 0.877\cdot F_{e(E4\text{-}b)} = 15260.24\,psi \quad \text{..... (E3-3)}$$

$$USE_{(E4\text{-}b).(E3\text{-}3)} := KL/r > 4.71\cdot\sqrt{\frac{E}{F_y}} = 0 \quad \text{..... } \rightarrow \text{"FALSE"}$$

Therefore:

$$F_{cr.(E4\text{-}b)} := USE_{(E4\text{-}b).(E3\text{-}2)}\cdot F_{cr.(E4\text{-}b).(E3\text{-}2)} + USE_{(E4\text{-}b).(E3\text{-}3)}\cdot F_{cr.(E4\text{-}b).(E3\text{-}3)} = 14920.38\,psi \quad \text{.....Flexural Buckling Stress}$$

Thus:

The *nominal compressive strength*, P_n, shall be determined based on the *limit states* of *flexural-torsional and torsional buckling, as follows:*

$$P_{n(E4\text{-}1)} := F_{cr.(E4\text{-}b)}\cdot A_g = 2782.17\,lbf \quad \text{..... (E4-1)}$$

$$USE_{(Section\text{-}E4)} = 1 \quad \text{..... } \rightarrow \text{"TRUE"}$$

$$USE_{(Section\text{-}E4)}\cdot P_{n(E4\text{-}1)} = 2782.17\,lbf$$

E7, MEMBERS WITH SLENDER ELEMENTS

This section applies to compression members with slender sections, as defined in Section B4 for uniformly compressed elements.

1.) Slender Unstiffened Elements, Q_s

(c) For single angles

(i) When $\text{"}\left(\frac{b}{t}, \text{"<"}, 0.45\cdot\sqrt{\frac{E}{F_y}}\right) = \text{"}23.62 \ge 13.34\ \therefore \text{!!FAIL!!"}$

$$Q_{s(E7\text{-}10)} := 1.0 = 1 \quad \text{..... (E7-10)}$$

$$USE_{(E7\text{-}10)} := \frac{b}{t} \le 0.45\cdot\sqrt{\frac{E}{F_y}} = 0 \quad \text{..... } \rightarrow \text{"FALSE"}$$

(ii) When "$\left(\frac{b}{t}, ">", 0.45\cdot\sqrt{\frac{E}{F_y}}\right)$ = "23.62 ≥ 13.34 ∴ PASS" AND "$\left(\frac{b}{t}, "<", 0.91\cdot\sqrt{\frac{E}{F_y}}\right)$ = "23.62 ≤ 26.98 ∴ PASS"

$Q_{s(E7\text{-}11)} := 1.34 - 0.76\cdot\left(\frac{b}{t}\right)\cdot\sqrt{\frac{F_y}{E}} = 0.73$ ..... (E7-11)

$USE_{(E7\text{-}11)} := \frac{b}{t} > 0.45\cdot\sqrt{\frac{E}{F_y}} \wedge \frac{b}{t} < 0.91\cdot\sqrt{\frac{E}{F_y}} = 1$ ..... → "TRUE"

(iii) When "$\left(\frac{b}{t}, ">", 0.91\cdot\sqrt{\frac{E}{F_y}}\right)$ = "23.62 ≤ 26.98 ∴ !!FAIL!!"

$Q_{s(E7\text{-}12)} := \frac{0.53\cdot E}{F_y\cdot\left(\frac{b}{t}\right)^2} = 0.83$ ..... (E7-12)

$USE_{(E7\text{-}12)} := \frac{b}{t} \geq 0.91\cdot\sqrt{\frac{E}{F_y}} = 0$ ..... → "FALSE"

Therefore:

$Q_{s.(1c)} := Q_{s(E7\text{-}10)}\cdot USE_{(E7\text{-}10)} + Q_{s(E7\text{-}11)}\cdot USE_{(E7\text{-}11)} + Q_{s(E7\text{-}12)}\cdot USE_{(E7\text{-}12)} = 0.73$ .....Reduction Factor For Unstiffened Elements

Thus:

$Q_s := Q_{s.(1c)} = 0.73$ .....Slender Unstiffened Elements

$Q := Q_s = 0.73$ ..... **User Note**: For cross sections composed of only unstiffened slender elements; Q = Qs

Proceeding With:

$F_{e(E7)} := F_{e(E3\text{-}4)} = 19634.8\,psi$

$Q = 0.73$

Then:

(a) When "$\left(KL/r, "<", 4.71\cdot\sqrt{\frac{E}{Q\cdot F_y}}\right)$ = "120.74 ≤ 162.93 ∴ PASS" **:**

$F_{cr(E7\text{-}2)} := Q\cdot\left[0.658^{\left[(Q\cdot F_y)\div F_{e(E7)}\right]}\right]\cdot F_y = 14457.12\,psi$ ..... (E7-2)

$USE_{(E7\text{-}2)} := KL/r \leq 4.71\cdot\sqrt{\frac{E}{Q\cdot F_y}} = 1$ ..... → "TRUE"

(b) When "$\left(KL/r, ">", 4.71\cdot\sqrt{\frac{E}{Q\cdot F_y}}\right)$ = "120.74 ≤ 162.93 ∴ !!FAIL!!" **:**

$F_{cr(E7\text{-}3)} := 0.877\cdot F_{e(E7)} = 17219.72\,psi$ ..... (E7-3)

$USE_{(E7\text{-}3)} := KL/r > 4.71\cdot\sqrt{\frac{E}{Q\cdot F_y}} = 0$ ..... → "FALSE"

Therefore:

$F_{cr.(E7)} := USE_{(E7\text{-}2)}\cdot F_{cr(E7\text{-}2)} + USE_{(E7\text{-}3)}\cdot F_{cr(E7\text{-}3)} = 14457.12\,psi$ .....Flexural Buckling Stress

Thus:

The *nominal compressive strength*, P_n, shall be determined based on the *limit states* of *flexural, torsional*, & *flexural-torsional buckling:*

$P_{n(E7\text{-}1)} := F_{cr.(E7)}\cdot A_g = 2695.79\,lbf$ ..... (E7-1)

$USE_{(Section\text{-}E7)} = 1$ ..... → "TRUE"

$USE_{(Section\text{-}E7)}\cdot P_{n(E7\text{-}1)} = 2695.79\,lbf$

AISC 360-10 - CHAPTER E

Corner of Curb in Compression	Detail Ref.	Sheet No:

E1, GENERAL PROVISIONS

$\Omega_c \equiv 1.67$ ..... ASD

$\phi_c \equiv 0.90$ ..... LRFD

TABLE B4.1a; Width-to-Thickness Ratios: Compression Elements Members Subject to Axial Compression

Case	Description of Element	Width-to-Thickness Ratio	Limiting Width-to-Thickness Ratio λ_r (nonslender/slender)	Examples
3	Legs of single angles, legs of double angles with separators, and all other unstiffened elements	b/t $b \div t = 23.62$	$0.45\sqrt{\frac{E}{F_y}}$ $0.45 \cdot \sqrt{E \div F_y} = 13.34$	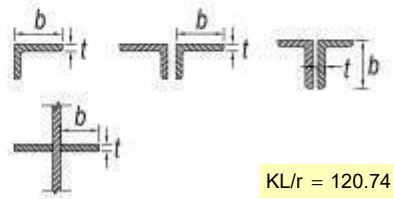 $KL/r = 120.74$

E3, FLEXURAL BUCKLING OF MEMBERS WITHOUT SLENDER ELEMENTS

$P_{n(E3\text{-}1)} = 3045.17\,lbf$

$bool(USE_{(Section\text{-}E3)}) = \text{"FALSE"}$

$USE_{(Section\text{-}E3)} \cdot P_{n(E3\text{-}1)} = 0$

$\text{"}\left(\frac{b}{t}, \text{"<"}, 0.45 \cdot \sqrt{\frac{E}{F_y}}\right) = \text{"}23.62 \geq 13.34 \;\; \therefore \text{ !!FAIL!!"}$

E4, TORSIONAL AND FLEXURAL-TORSIONAL BUCKLING OF MEMBERS WITHOUT SLENDER ELEMENTS

$P_{n(E4\text{-}1)} = 2782.17\,lbf$

$bool(USE_{(Section\text{-}E4)}) = \text{"TRUE"}$

$USE_{(Section\text{-}E4)} \cdot P_{n(E4\text{-}1)} = 2782.17\,lbf$

$\text{"}(b \div t, \text{">"}, 20) = \text{"}23.62 \geq 20 \;\; \therefore \text{ PASS"}$

E7, MEMBERS WITH SLENDER ELEMENTS

$P_{n(E7\text{-}1)} = 2695.79\,lbf$

$bool(USE_{(Section\text{-}E7)}) = \text{"TRUE"}$

$USE_{(Section\text{-}E7)} \cdot P_{n(E7\text{-}1)} = 2695.79\,lbf$

$\text{"}\left(\frac{b}{t}, \text{">"}, 0.45 \cdot \sqrt{\frac{E}{F_y}}\right) = \text{"}23.62 \geq 13.34 \;\; \therefore \text{ PASS"}$

The nominal compressive strength, P.n, shall be the lowest vaue obtained based on the applicable limit states of flexural buckling, torsional buckling, and flexural-torsional buckling.

$$P_n := \text{minPositiveNotZero}\left[\begin{pmatrix} USE_{(Section\text{-}E3)} \cdot P_{n(E3\text{-}1)} \\ USE_{(Section\text{-}E4)} \cdot P_{n(E4\text{-}1)} \\ USE_{(Section\text{-}E7)} \cdot P_{n(E7\text{-}1)} \end{pmatrix} \div lbf\right] \cdot lbf = 2695.79\,lbf$$ ..... *Nominal Compressive Strength*

$P_{n*\phi.c} := \phi_c \cdot P_n = 2426.21\,lbf$ ..... *Design Compressive Strength*

$P_{n/\Omega.c} := P_n \div \Omega_c = 1614.24\,lbf$ ..... *Allowable Compressive Strength*

CURB RESULTS

CALCULATED REACTIONS (FOR UNIT #3)

$R_{C1} = 1,482$ #/corner (COMPRESSION)

$R_T = 502$ #/corner (TENSION)

$E_{H3} = 4,317$# (SHEAR TOTAL)

ALLOWABLE COMPRESSIVE STRENGTH

$P_n/\Omega_c = 1,614$# (PER PREVIOUS CALCULATIONS)

- SINCE $P_n/\Omega_c = 1,614^{\#} > R_{C1} = 1,482^{\#}$

THEREFORE 36" TALL, 16 GAUGE STEEL CURB HAS SUFFICIENT COMPRESSION CAPACITY TO RESIST SEISMIC LOADING.

ANCHOR DESIGN (CURB TO ROOF STRUCTURE)

CALCULATE SEISMIC OVERTURN AT ROOF LEVEL

$$M_{E_R} = E_H \left(\frac{H_T}{2} + \text{CURB } H_T\right)$$

$$= 4{,}317^{\#} \left(\frac{56.75''}{2} + 36''\right)$$

$$M_{E_R} = 277{,}907 \text{ IN. } \#$$

- CONVERT TO FORCE COUPLE

$$F_{E_R} = \frac{M_{E_R}}{X} = \frac{277{,}907 \text{ IN. } \#}{65 \text{ IN}}$$

$$F_{E_R} = \pm 4{,}275^{\#} \quad \text{(TENSION OR COMPRESSION)}$$

RESISTING MOMENT (FROM DL)

$$\left.\begin{aligned} M_{R2} &= 41{,}625 \text{ IN. } \# \\ F_{R2} &= 640^{\#} \end{aligned}\right\} \left(\begin{array}{c}\text{FROM PREVIOUS CALC'S Pg. 4} \\ \text{MINIMUM RESISTANCE (0.60DL)}\end{array}\right)$$

ANCHOR TENSION (0.60 + 0.7E LOAD COMBINATION WILL CONTROL)

$$A_T = \frac{F_{ER} - F_{R2}}{2 \text{ CORNERS}} - 0.6 P_{DL(MIN)} + E_V$$

$$= \frac{4{,}275^{\#} - 640^{\#}}{2} - (0.60)(472^{\#}) + 863^{\#}\left(\frac{472^{\#}}{2500^{\#}}\right)$$

$$A_T = 1{,}697^{\#} \quad \text{(TENSION)}$$

- APPLY STRENGTH FACTOR

USE

$$A_{TU} = 1.5(1{,}697^{\#})$$

$$A_{TU} = 2{,}546^{\#}$$

ASD/LRFD LOAD FACTOR CONVERSION

$$\frac{0.9DL}{0.6DL} = 1.5 \Leftarrow \text{CONTROLS}$$

$$\frac{1.0E}{0.7E} = 1.43$$

ANCHOR DESIGN (CURB TO ROOF STRUCTURE)

REACTIONS

$A_T = 1{,}697\ \#/\text{CORNER}$
$A_{TU} = 2{,}546\ \#/\text{CORNER}$
$E_H = 4{,}317\ \#$

(FROM PREVIOUS UNIT #3 CALC'S)

SHEAR

NOTE:
- ASSUME SHEAR LOAD WILL BE RESISTED BY 2 SIDES PARALLED TO THE DIRECTION OF SHEAR FORCE
- ASSUME 4 OR 8 ANCHORS PER SIDE

$$V = \frac{E_H}{\#\ \text{ANCHORS}}$$

$$V_4 = \frac{4{,}317\ \#}{(2\ \text{SIDES})(4\ \text{ANCHOR/SIDE})} \qquad V_8 = \frac{4{,}317\ \#}{(2\ \text{SIDES})(8\ \text{ANCHORS})}$$

$$V_4 = 540\ \#/\text{ANCHOR} \qquad V_8 = 270\ \#/\text{ANCHOR}$$

$$V_{U4} = 540\ \#(1.5) = 810\ \#/\text{ANCHOR} \qquad V_{U8} = 270\ \#(1.5) = 405\ \#/\text{ANCHOR}$$

TENSION

- ASSUME 2 OR 4 ANCHORS CLOSEST TO CORNER RESIST TENSION

- ALLOWABLE LOAD

$$T = \frac{A_T}{\#\ \text{OF ANCHORS}}$$

$$T_2 = \frac{1{,}697\ \#}{2\ \text{ANCHORS}} \qquad T_4 = \frac{1{,}697\ \#}{4\ \text{ANCHORS}}$$

$$T_2 = 849\ \#/\text{ANCHOR} \qquad T_4 = 424\ \#/\text{ANCHOR}$$

- FACTORED LOAD

$$T_U = \frac{A_{TU}}{\#\ \text{OF ANCHORS}}$$

$$T_{U2} = \frac{2{,}546\ \#}{2\ \text{ANCHORS}} \qquad T_{U4} = \frac{2{,}546\ \#}{4\ \text{ANCHORS}}$$

$$T_{U2} = 1{,}273\ \#/\text{ANCHOR} \qquad T_{U4} = 637\ \#/\text{ANCHOR}$$

$T_{all} := 5676 \cdot lbf$ Allowable Tension

$V_{all} := 2984 \cdot lbf$ Allowable Shear

$T_{max} := 5000 \cdot lbf$ Target Tension

$V_{max} := \sqrt{1.00 - \left(\frac{T_{max}}{T_{all}}\right)^2} \cdot V_{all} = 1412.32\ lbf$ Corresponding Target Shear

AAMA Allowables

Detail Ref.

Sheet No:

TABLE 20.9: Fastener Capacity

STAINLESS STEEL - Alloy Groups 1, 2 and 3, Condition CW (UNC Treads)

Nominal Fastener Diameter & Threads per Inch	D Nominal Thread Diameter (in)	A(S) Tensile Stress Area (in2)	A(R) Thread Root Area (in2)	Allowable Tension (lbs)	Allowable Shear		Allowable Bearing (lbs)			Minimum Material Thickness (lbs) to Equal Tensile Capacity of Fastener (in)			Maximum Tensile Load (lbs) for Available 3/8" Plate Thickness		
					Single (lbs)	Double (lbs)	1/8" Steel A36	1/8" Aluminum 6063-T5	1/8" Aluminum 6063-T6	A36	6063-T5	6063-T6	3/8" Steel A36	3/8" Aluminum 6063-T5	3/8" Aluminum 6063-T6
#6-32	0.1380	0.0091	0.0078	303	150	300	900	253	345	0.1335	0.2538	0.1943	303	303	303
#8-32	0.1640	0.0140	0.0124	467	239	477	1,070	301	410	0.1733	0.3356	0.2466	467	467	467
#10-24	0.1900	0.0175	0.0151	584	292	583	1,240	348	475	0.1872	0.3410	0.2501	584	584	584
#12-24	0.2160	0.0242	0.0214	805	411	822	1,409	396	540	0.2269	> 3/8"	0.3016	805	734	805
1/4-20	0.2500	0.0318	0.0280	1,061	538	1,076	1,631	458	625	0.2534	> 3/8"	0.3373	1,061	865	1,061
5/16-18	0.3125	0.0524	0.0469	2,097	1,083	2,166	2,039	573	781	0.2867	> 3/8"	> 3/8"	2,097	1,303	1,776
3/8-16	0.3750	0.0775	0.0699	3,100	1,614	3,228	2,447	688	938	0.3181	> 3/8"	> 3/8"	3,100	1,572	2,144
7/16-14	0.4375	0.1063	0.0961	4,252	2,220	4,440	2,855	802	1,094	0.3442	> 3/8"	> 3/8"	4,252	1,873	2,554
USE ⇒ 1/2-13	0.5000	0.1419	0.1292	5,676	2,984	5,968	3,263	917	1,250	> 3/8"	> 3/8"	> 3/8"	5,642	2,140	2,918
9/16-12	0.5625	0.1819	0.1664	7,278	3,842	7,685	3,670	1,031	1,406	> 3/8"	> 3/8"	> 3/8"	6,444	2,444	3,333
5/8-11	0.6250	0.2260	0.2071	9,040	4,782	9,564	4,078	1,146	1,563	> 3/8"	> 3/8"	> 3/8"	7,148	2,711	3,697
3/4-10	0.7500	0.3345	0.3091	11,372	6,022	12,045	4,894	1,375	1,875	> 3/8"	> 3/8"	> 3/8"	8,612	3,266	4,454
7/8-9	0.8750	0.4617	0.4285	15,583	8,351	16,701	5,709	1,604	2,188	> 3/8"	> 3/8"	> 3/8"	10,158	3,853	5,254
1-8	1.0000	0.6057	0.5630	20,444	10,970	21,940	6,525	1,833	2,500	> 3/8"	> 3/8"	> 3/8"	11,696	4,437	6,050

STAINLESS STEEL - Alloy Groups 1, 2 and 3, Condition CW (Spaced Threads)

Nominal Fastener Diameter & Threads per Inch	D Nominal Thread Diameter (in)	K Basic Minor Diameter (in)	A(R) Thread Root Area (in2)	Allowable Tension (lbs)	Allowable Shear		Allowable Bearing (lbs)			Minimum Material Thickness (lbs) to Equal Tensile Capacity of Fastener (in)			Maximum Tensile Load (lbs) for Available 3/8" Plate Thickness		
					Single (lbs)	Double (lbs)	1/8" Steel A36	1/8" Aluminum 6063-T5	1/8" Aluminum 6063-T6	A36	6063-T5	6063-T6	3/8" Steel A36	3/8" Aluminum 6063-T5	3/8" Aluminum 6063-T6
#6-20	0.1380	0.0990	0.0077	257	148	296	900	253	345	0.1191	0.1695	0.1378	257	257	257
#8-18	0.1640	0.1160	0.0106	352	203	407	1,070	301	410	0.1437	0.1930	0.1567	352	352	352
#10-16	0.1900	0.1350	0.0143	477	275	551	1,240	348	475	0.1528	0.2225	0.1805	477	477	477
#12-14	0.2160	0.1570	0.0194	645	373	745	1,409	396	540	0.1820	0.2610	0.2115	645	645	645
1/4-14	0.2500	0.1850	0.0269	896	517	1,035	1,631	458	625	0.2181	0.2994	0.2379	896	896	896
5/16-12	0.3125	0.2360	0.0437	1,750	1,010	2,020	2,039	573	781	0.2839	> 3/8"	0.2990	1,750	1,681	1,750
3/8-12	0.3750	0.2990	0.0702	2,809	1,622	3,243	2,447	688	938	> 3/8"	> 3/8"	> 3/8"	2,773	2,017	2,751

Group 1,2,3-Cond. CW	≤ 5/8" Dia.	≥ 3/4" Dia.
F_U (Min. Ultimate Tensile Strength)	100,000 psi	85,000 psi
F_T (Allow. Tensile Stress, D≤1/4")	33,333 psi	N/A psi
F_T (Allow. Tensile Stress, D> 1/4")	40,000 psi	33,750 psi
F_V (Allowable Shear Strass; D≤1/4")	19,245 psi	N/A psi
F_V (Allowable Shear Strass; D>1/4")	23,094 psi	19,486 psi

For Diameters < 3/4"	Effective Area (UNC Threads)	Effective Area (Spaced Threads)
$F_T = F_U/SF$	$A(R) = \pi\ (D-1.2269/N)^2 / 4$	$A(R) = \pi K^2/4$
Allowable Tension = $F_T[A(S)]$	$A(S) = \pi\ (D-0.9743/N)^2 / 4$	$A(S) = \pi K^2/4$
F_V = Fu / (SF x sq rt (3))		
Allowable Single Shear =$F_V[A(R)]$		

NOTE 11:

1. Values are taken from AISC, ASTM, IFI, SAE and AA documents. K values for spaced threads are taken as the minimum values in IFI Fastener Handbook, 6th Ed. 2. Safety Factor used for fasteners with diameters 1/4" or less is 3.0, Safety Factor used for fasteners with diameters 5/16" or greater is 2.5.

3. Fasteners with diameters of 3/4" and greater are fabricated from different material than fasteners less than 3/4" in diameter.

4. For diameters of 3/4" and greater, F_y=45,00 psi. For these, tensile and shear yields govern the allowable tension and shear values (i.e., 0.75 F_y<F_u/SF

RICE ENGINEERING
105 School Creek Trail
Luxemburg, WI 54217
Phone: (920) 617-1042
Fax: (920) 617-1100
www.rice-inc.com

Template:

Project Description:

CASTRU 2 and 3 Seismic Curb

Job No: R16-10-233

Engineer: JGM

Sheet No: 16

Date: 11/7/16

Rev:

Chk By:

Date:

PLATE WASHER BENDING

- USE PLATE WASHER TO HELP DISTRIBUTE LOADS

TRY 3" x 3" x 1/4" THICK PLATE

$A_T = 1{,}697^{\#}$ / CORNER

$$T = \frac{A_T}{\#\ \text{ANCHORS}} = \frac{1{,}697^{\#}}{2\ \text{ANCHORS}}$$

$T = 849^{\#}$ / ANCHOR

CHECK PLATE WEAK AXIS BENDING

$$M = \frac{Pl}{4} = \frac{(849^{\#})(3")}{4}$$

$$M = 637\ \text{IN}\cdot\#$$

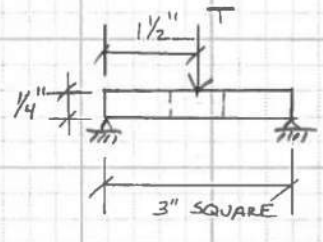

SECTION

N.T.S.

ACTUAL BENDING STRESS

$$f_b = \frac{M}{S_x} = \frac{637^{\#\cdot IN}}{0.03125\ IN^3}$$

$$f_b = 20{,}376\ PSI$$

$$S_x = \frac{bd^2}{6} = \frac{(3")(1/4")^2}{6}$$

$$S_x = 0.03125\ IN^3$$

ALLOWABLE STRESS

$$F_b = 0.75\,(F_y) = 0.75\,(36^{KSI})$$

$$F_b = 27{,}000\ PSI$$

- SINCE $f_b = 20.4^{KSI} < F_b = 27^{KSI}$

THEREFORE, A 3" x 3" x 1/4" PLATE WASHER WILL HAVE SUFFICIENT BENDING CAPACITY.

Company:	Rice Engineering	Page:	1
Specifier:	JGM	Project:	CASRTU #2 & #3
Address:	105 School Creek Trail, Luxemburg, WI 54217	Sub-Project I Pos. No.:	R16-10-233
Phone I Fax:	(920) 617-1042 |	Date:	11/18/2016
E-Mail:			

Specifier's comments: Seismic Curb Design

1 Input data

Anchor type and diameter:	**Kwik Bolt TZ - SS 304 1/2 (3 1/4)**
Effective embedment depth:	h_{ef} = 3.250 in., h_{nom} = 3.625 in.
Material:	AISI 304
Evaluation Service Report:	ESR-1917
Issued I Valid:	6/1/2016 | 5/1/2017
Proof:	Design method ACI 318 / AC193
Stand-off installation:	e_b = 0.000 in. (no stand-off); t = 0.250 in.
Anchor plate:	l_x x l_y x t = 3.000 in. x 3.000 in. x 0.250 in.; (Recommended plate thickness: not calculated
Profile:	no profile
Base material:	cracked concrete, 3000, f_c' = 3000 psi; h = 6.000 in.
Reinforcement:	tension: condition B, shear: condition B; no supplemental splitting reinforcement present edge reinforcement: none or < No. 4 bar
Seismic loads (cat. C, D, E, or F)	yes (D.3.3.6)

Geometry [in.] & Loading [lb, in.lb]

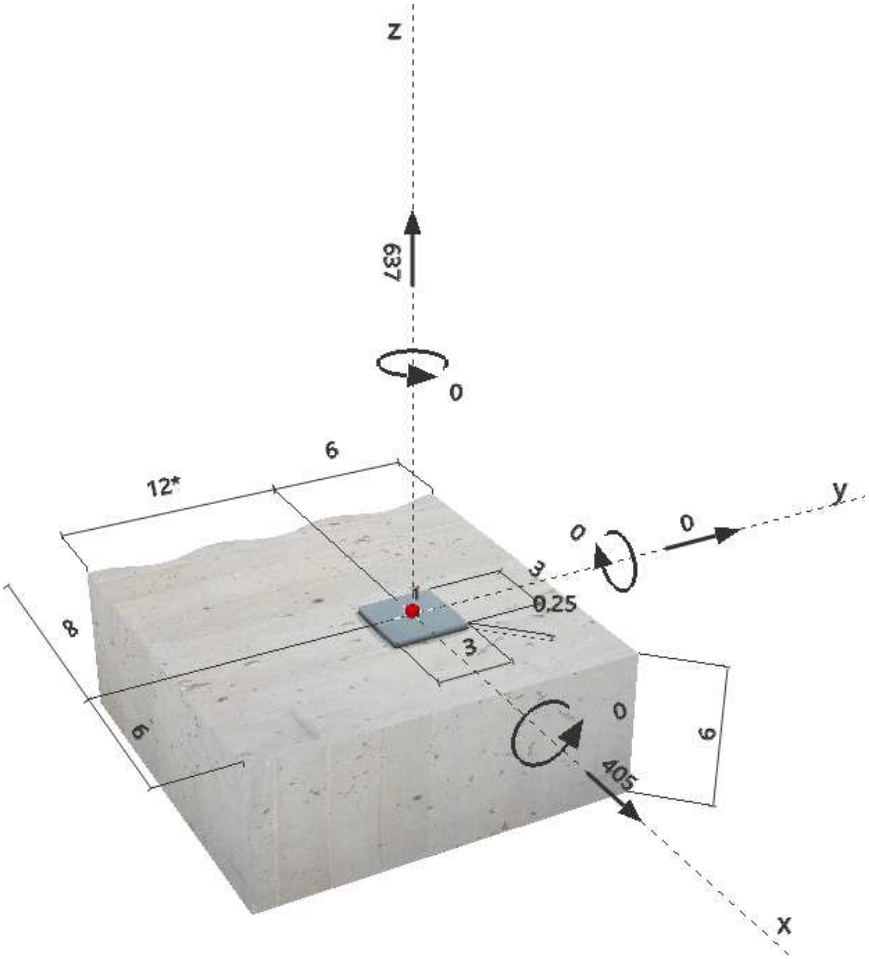

Company:	Rice Engineering	Page:	2
Specifier:	JGM	Project:	CASRTU #2 & #3
Address:	105 School Creek Trail, Luxemburg, WI 54217	Sub-Project I Pos. No.:	R16-10-233
Phone I Fax:	(920) 617-1042 |	Date:	11/18/2016
E-Mail:			

2 Load case/Resulting anchor forces

Load case: Design loads

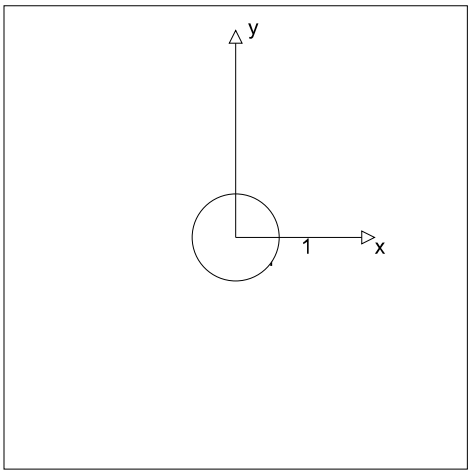

Anchor reactions [lb]

Tension force: (+Tension, -Compression)

Anchor	Tension force	Shear force	Shear force x	Shear force y
1	637	405	405	0

max. concrete compressive strain: - [‰]
max. concrete compressive stress: - [psi]
resulting tension force in (x/y)=(0.000/0.000): 637 [lb]
resulting compression force in (x/y)=(0.000/0.000): 0 [lb]

3 Tension load

	Load N_{ua} [lb]	Capacity ϕN_n [lb]	Utilization $\beta_N = N_{ua}/\phi N_n$	Status
Steel Strength*	637	3466	19	OK
Pullout Strength*	N/A	N/A	N/A	N/A
Concrete Breakout Strength**	637	1064	60	OK

* anchor having the highest loading **anchor group (anchors in tension)

3.1 Steel Strength

N_{sa} = ESR value refer to ICC-ES ESR-1917
$\phi N_{sa} \geq N_{ua}$ ACI 318-08 Eq. (D-1)

Variables

$A_{se,N}$ [in.^{2}]	f_{uta} [psi]
0.10	115000

Calculations

N_{sa} [lb]
11554

Results

N_{sa} [lb]	ϕ_{steel}	$\phi_{nonductile}$	ϕN_{sa} [lb]	N_{ua} [lb]
11554	0.750	0.400	3466	637

PROFIS Anchor (c) 2003-2009 Hilti AG, FL-9494 Schaan Hilti is a registered Trademark of Hilti AG, Schaan

Company:	Rice Engineering	Page:	3
Specifier:	JGM	Project:	CASRTU #2 & #3
Address:	105 School Creek Trail, Luxemburg, WI 54217	Sub-Project I Pos. No.:	R16-10-233
Phone I Fax:	(920) 617-1042 |	Date:	11/18/2016
E-Mail:			

3.2 Concrete Breakout Strength

$N_{cb} = \left(\frac{A_{Nc}}{A_{Nc0}}\right) \psi_{ed,N}\, \psi_{c,N}\, \psi_{cp,N}\, N_b$ — ACI 318-08 Eq. (D-4)

$\phi\ N_{cb} \geq N_{ua}$ — ACI 318-08 Eq. (D-1)

A_{Nc} see ACI 318-08, Part D.5.2.1, Fig. RD.5.2.1(b)

$A_{Nc0} = 9\, h_{ef}^2$ — ACI 318-08 Eq. (D-6)

$\psi_{ec,N} = \left(\frac{1}{1 + \frac{2\, e_N'}{3\, h_{ef}}}\right) \leq 1.0$ — ACI 318-08 Eq. (D-9)

$\psi_{ed,N} = 0.7 + 0.3 \left(\frac{c_{a,min}}{1.5 h_{ef}}\right) \leq 1.0$ — ACI 318-08 Eq. (D-11)

$\psi_{cp,N} = \mathrm{MAX}\left(\frac{c_{a,min}}{c_{ac}}, \frac{1.5 h_{ef}}{c_{ac}}\right) \leq 1.0$ — ACI 318-08 Eq. (D-13)

$N_b = k_c\, \lambda\, \sqrt{f_c'}\, h_{ef}^{1.5}$ — ACI 318-08 Eq. (D-7)

Variables

h_{ef} [in.]	$e_{c1,N}$ [in.]	$e_{c2,N}$ [in.]	$c_{a,min}$ [in.]	$\psi_{c,N}$
3.250	0.000	0.000	6.000	1.000

c_{ac} [in.]	k_c	λ	f_c' [psi]
7.500	17	1	3000

Calculations

A_{Nc} [in.^{2}]	A_{Nc0} [in.^{2}]	$\psi_{ec1,N}$	$\psi_{ec2,N}$	$\psi_{ed,N}$	$\psi_{cp,N}$	N_b [lb]
95.06	95.06	1.000	1.000	1.000	1.000	5455

Results

N_{cb} [lb]	$\phi_{concrete}$	$\phi_{seismic}$	$\phi_{nonductile}$	$\phi\ N_{cb}$ [lb]	N_{ua} [lb]
5455	0.650	0.750	0.400	1064	637

PROFIS Anchor (c) 2003-2009 Hilti AG, FL-9494 Schaan Hilti is a registered Trademark of Hilti AG, Schaan

Company:	Rice Engineering	Page:	4
Specifier:	JGM	Project:	CASRTU #2 & #3
Address:	105 School Creek Trail, Luxemburg, WI 54217	Sub-Project I Pos. No.:	R16-10-233
Phone I Fax:	(920) 617-1042 |	Date:	11/18/2016
E-Mail:			

4 Shear load

	Load V_{ua} [lb]	Capacity ϕV_n [lb]	Utilization $\beta_V = V_{ua}/\phi V_n$	Status
Steel Strength*	405	1789	23	OK
Steel failure (with lever arm)*	N/A	N/A	N/A	N/A
Pryout Strength**	405	2291	18	OK
Concrete edge failure in direction x+**	405	745	55	OK

* anchor having the highest loading **anchor group (relevant anchors)

4.1 Steel Strength

$V_{sa,eq}$ = ESR value refer to ICC-ES ESR-1917

$\phi\ V_{steel} \geq V_{ua}$ ACI 318-08 Eq. (D-2)

Variables

$A_{se,V}$ [in.^{2}]	f_{uta} [psi]
0.10	115000

Calculations

V_{sa} [lb]
6880

Results

V_{sa} [lb]	ϕ_{steel}	$\phi_{nonductile}$	$\phi\ V_{sa}$ [lb]	V_{ua} [lb]
6880	0.650	0.400	1789	405

4.2 Pryout Strength

$V_{cp} = k_{cp}\left[\left(\frac{A_{Nc}}{A_{Nc0}}\right)\psi_{ed,N}\,\psi_{c,N}\,\psi_{cp,N}\,N_b\right]$ ACI 318-08 Eq. (D-30)

$\phi\ V_{cp} \geq V_{ua}$ ACI 318-08 Eq. (D-2)

A_{Nc} see ACI 318-08, Part D.5.2.1, Fig. RD.5.2.1(b)

$A_{Nc0} = 9\,h_{ef}^2$ ACI 318-08 Eq. (D-6)

$\psi_{ec,N} = \left(\frac{1}{1 + \frac{2\,e_N'}{3\,h_{ef}}}\right) \leq 1.0$ ACI 318-08 Eq. (D-9)

$\psi_{ed,N} = 0.7 + 0.3\left(\frac{c_{a,min}}{1.5h_{ef}}\right) \leq 1.0$ ACI 318-08 Eq. (D-11)

$\psi_{cp,N} = \mathrm{MAX}\left(\frac{c_{a,min}}{c_{ac}}, \frac{1.5h_{ef}}{c_{ac}}\right) \leq 1.0$ ACI 318-08 Eq. (D-13)

$N_b = k_c\,\lambda\,\sqrt{f_c'}\,h_{ef}^{1.5}$ ACI 318-08 Eq. (D-7)

Variables

k_{cp}	h_{ef} [in.]	$e_{c1,N}$ [in.]	$e_{c2,N}$ [in.]	$c_{a,min}$ [in.]
2	3.250	0.000	0.000	6.000

$\psi_{c,N}$	c_{ac} [in.]	k_c	λ	f_c' [psi]
1.000	7.500	17	1	3000

Calculations

A_{Nc} [in.^{2}]	A_{Nc0} [in.^{2}]	$\psi_{ec1,N}$	$\psi_{ec2,N}$	$\psi_{ed,N}$	$\psi_{cp,N}$	N_b [lb]
95.06	95.06	1.000	1.000	1.000	1.000	5455

Results

V_{cp} [lb]	$\phi_{concrete}$	$\phi_{seismic}$	$\phi_{nonductile}$	$\phi\ V_{cp}$ [lb]	V_{ua} [lb]
10911	0.700	0.750	0.400	2291	405

PROFIS Anchor (c) 2003-2009 Hilti AG, FL-9494 Schaan Hilti is a registered Trademark of Hilti AG, Schaan

4.3 Concrete edge failure in direction x+

$V_{cb} = \left(\frac{A_{Vc}}{A_{Vc0}}\right) \psi_{ed,V}\, \psi_{c,V}\, \psi_{h,V}\, \psi_{parallel,V}\, V_b$ ACI 318-08 Eq. (D-21)

$\phi\ V_{cb} \geq V_{ua}$ ACI 318-08 Eq. (D-2)

A_{Vc} see ACI 318-08, Part D.6.2.1, Fig. RD.6.2.1(b)

$A_{Vc0} = 4.5\, c_{a1}^2$ ACI 318-08 Eq. (D-23)

$\psi_{ec,V} = \left(\frac{1}{1 + \frac{2e_v'}{3c_{a1}}}\right) \leq 1.0$ ACI 318-08 Eq. (D-26)

$\psi_{ed,V} = 0.7 + 0.3\left(\frac{c_{a2}}{1.5c_{a1}}\right) \leq 1.0$ ACI 318-08 Eq. (D-28)

$\psi_{h,V} = \sqrt{\frac{1.5c_{a1}}{h_a}} \geq 1.0$ ACI 318-08 Eq. (D-29)

$V_b = \left(7\left(\frac{l_e}{d_a}\right)^{0.2} \sqrt{d_a}\right) \lambda\ \sqrt{f_c'}\, c_{a1}^{1.5}$ ACI 318-08 Eq. (D-24)

Variables

c_{a1} [in.]	c_{a2} [in.]	e_{cV} [in.]	$\psi_{c,V}$	h_a [in.]
6.000	6.000	0.000	1.000	6.000

l_e [in.]	λ	d_a [in.]	f_c' [psi]	$\psi_{parallel,V}$
3.250	1.000	0.500	3000	1.000

Calculations

A_{Vc} [in.^{2}]	A_{Vc0} [in.^{2}]	$\psi_{ec,V}$	$\psi_{ed,V}$	$\psi_{h,V}$	V_b [lb]
90.00	162.00	1.000	0.900	1.225	5794

Results

V_{cb} [lb]	$\phi_{concrete}$	$\phi_{seismic}$	$\phi_{nonductile}$	$\phi\ V_{cb}$ [lb]	V_{ua} [lb]
3548	0.700	0.750	0.400	745	405

5 Combined tension and shear loads

β_N	β_V	ζ	Utilization $\beta_{N,V}$ [%]	Status
0.599	0.544	5/3	79	OK

$\beta_{NV} = \beta_N^{\zeta} + \beta_V^{\zeta} <= 1$

6 Warnings

- Load re-distributions on the anchors due to elastic deformations of the anchor plate are not considered. The anchor plate is assumed to be sufficiently stiff, in order not to be deformed when subjected to the loading! Input data and results must be checked for agreement with the existing conditions and for plausibility!
- Condition A applies when supplementary reinforcement is used. The Φ factor is increased for non-steel Design Strengths except Pullout Strength and Pryout strength. Condition B applies when supplementary reinforcement is not used and for Pullout Strength and Pryout Strength. Refer to your local standard.
- Refer to the manufacturer's product literature for cleaning and installation instructions.
- Checking the transfer of loads into the base material and the shear resistance are required in accordance with ACI 318 or the relevant standard!
-
-

Fastening meets the design criteria!

PROFIS Anchor (c) 2003-2009 Hilti AG, FL-9494 Schaan Hilti is a registered Trademark of Hilti AG, Schaan

Company:	Rice Engineering	Page:	6
Specifier:	JGM	Project:	CASRTU #2 & #3
Address:	105 School Creek Trail, Luxemburg, WI 54217	Sub-Project I Pos. No.:	R16-10-233
Phone I Fax:	(920) 617-1042 |	Date:	11/18/2016
E-Mail:			

7 Installation data

Anchor plate, steel: -
Profile: no profile
Hole diameter in the fixture: d_f = 0.563 in.
Plate thickness (input): 0.250 in.
Recommended plate thickness: not calculated
Drilling method: Hammer drilled
Anchor type and diameter: Kwik Bolt TZ - SS 304 1/2 (3 1/4)
Installation torque: 480.001 in.lb
Hole diameter in the base material: 0.500 in.
Hole depth in the base material: 4.000 in.
Minimum thickness of the base material: 6.000 in.
Cleaning: Manual cleaning of the drilled hole according to instructions for use is required.

7.1 Recommended accessories

Drilling	Cleaning	Setting
• Suitable Rotary Hammer	• Manual blow-out pump	• Torque wrench
• Properly sized drill bit		• Hammer

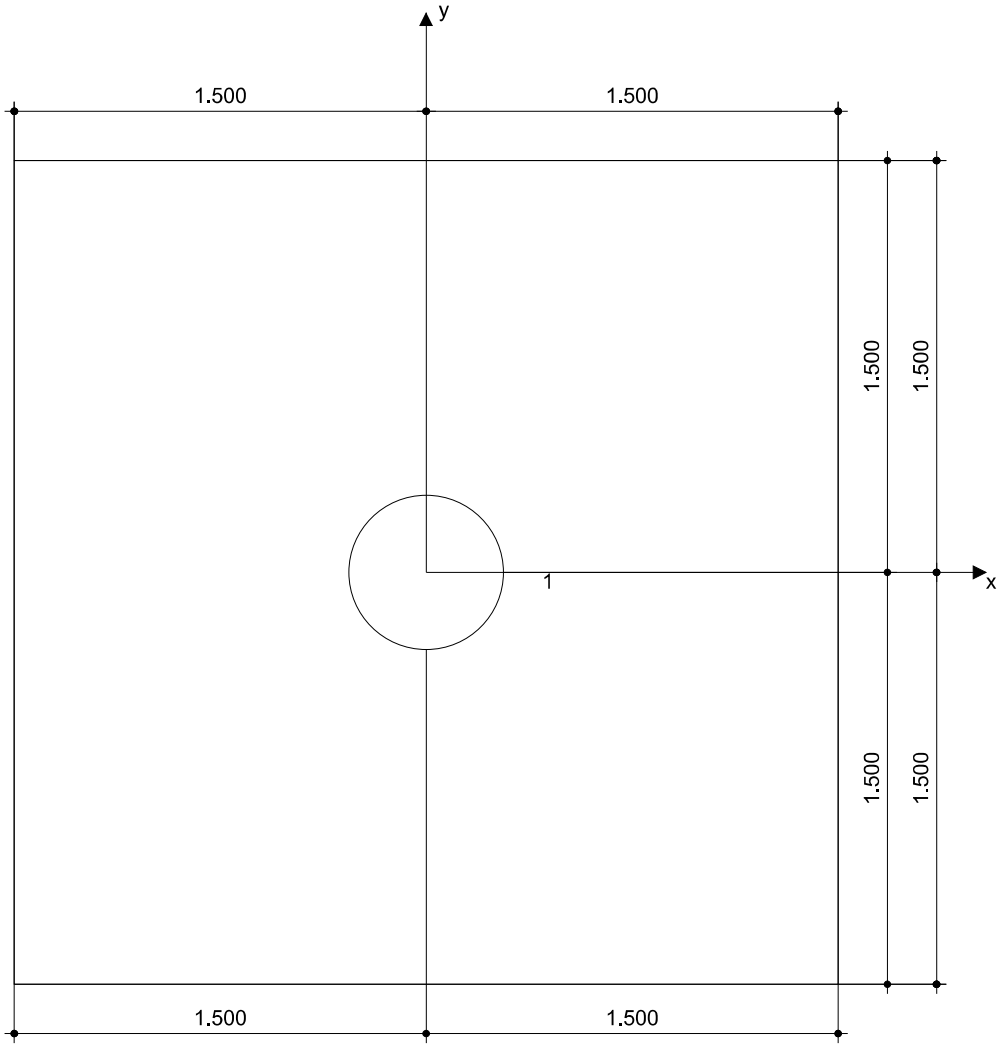

Coordinates Anchor in.

Anchor	x	y	c_{-x}	c_{+x}	c_{-y}	c_{+y}
1	0.000	0.000	-	6.000	12.000	6.000

PROFIS Anchor (c) 2003-2009 Hilti AG, FL-9494 Schaan Hilti is a registered Trademark of Hilti AG, Schaan

Company:	Rice Engineering	Page:	7
Specifier:	JGM	Project:	CASRTU #2 & #3
Address:	105 School Creek Trail, Luxemburg, WI 54217	Sub-Project I Pos. No.:	R16-10-233
Phone I Fax:	(920) 617-1042 |	Date:	11/18/2016
E-Mail:			

8 Remarks; Your Cooperation Duties

- Any and all information and data contained in the Software concern solely the use of Hilti products and are based on the principles, formulas and security regulations in accordance with Hilti's technical directions and operating, mounting and assembly instructions, etc., that must be strictly complied with by the user. All figures contained therein are average figures, and therefore use-specific tests are to be conducted prior to using the relevant Hilti product. The results of the calculations carried out by means of the Software are based essentially on the data you put in. Therefore, you bear the sole responsibility for the absence of errors, the completeness and the relevance of the data to be put in by you. Moreover, you bear sole responsibility for having the results of the calculation checked and cleared by an expert, particularly with regard to compliance with applicable norms and permits, prior to using them for your specific facility. The Software serves only as an aid to interpret norms and permits without any guarantee as to the absence of errors, the correctness and the relevance of the results or suitability for a specific application.
- You must take all necessary and reasonable steps to prevent or limit damage caused by the Software. In particular, you must arrange for the regular backup of programs and data and, if applicable, carry out the updates of the Software offered by Hilti on a regular basis. If you do not use the AutoUpdate function of the Software, you must ensure that you are using the current and thus up-to-date version of the Software in each case by carrying out manual updates via the Hilti Website. Hilti will not be liable for consequences, such as the recovery of lost or damaged data or programs, arising from a culpable breach of duty by you.

PROFIS Anchor (c) 2003-2009 Hilti AG, FL-9494 Schaan Hilti is a registered Trademark of Hilti AG, Schaan

Dowel Type Fastener Capacity (NDS 2012)

Dowel Type Fastener Capacity (NDS 2012)	Detail Ref.	Sheet No:

$V_{pos} := 270 \cdot lbf$ $\quad V_{neg} := 270 \cdot lbf$

$T_{pos} := 424 \cdot lbf$ $\quad T_{neg} := 424 \cdot lbf$

1/2 in Lag Screw

$l_m := 4.5$ thickness of main member, in.

$l_s := 0.25$ thickness of side member, in

30 ksi Steel

$F_{yb} = 45000$ bending yield strength, psi.

$D = 0.5$ unthreaded shank diameter of screw, in.

$D_r = 0.37$ root diameter of screw

$F_{es} = 73950$ bearing strength, psi

Spruce Pine-Fir

$p := 4$ penetration, in

$t_{shim} := 0$ maximum thickness of shim, in

$C_D := 1.0$ load duration factor, 10.3.2

$C_M := 1.0$ wet service factor, 10.3.3

$C_t := 1.0$ temperature factor, 10.3.4

$C_g := 1.0$ group action factor, 10.3.6

$C_\Delta := 1.0$ geometry factor, 11.5.1

$C_{eg} := 1.0$ end grain factor, 11.5.2

$C_{di} := 1.0$ diaphragm factor, 11.5.3

$\theta := 90$ angle of load to grain, degree

Calculations

$$K_\theta := 1 + 0.25 \cdot \frac{\theta}{90} = 1.25 \qquad R_e := \frac{F_{em}}{F_{es}} = 0.03 \qquad R_t := \frac{l_m}{l_s} = 18$$

$$k_1 := \frac{\sqrt{R_e + 2 \cdot R_e^2 \cdot \left(1 + R_t + R_t^2\right) + R_t^2 \cdot R_e^3} - R_e \cdot \left(1 + R_t\right)}{1 + R_e} = 0.26$$

$$k_2 := -1 + \sqrt{2 \cdot \left(1 + R_e\right) + \frac{2 \cdot F_{yb} \cdot \left(1 + 2 \cdot R_e\right) \cdot D_r^2}{3 \cdot F_{em} \cdot l_m^2}} = 0.47$$

$$k_3 := -1 + \sqrt{\frac{2 \cdot \left(1 + R_e\right)}{R_e} + \frac{2 \cdot F_{yb} \cdot \left(2 + R_e\right) \cdot D_r^2}{3 \cdot F_{em} \cdot l_s^2}}$$

$$K_D := \begin{cases} 2.2 & \text{if } D_r \le 0.17 \\ \text{otherwise} \begin{cases} 10 \cdot D_r + 0.5 & \text{if } 0.17 < D_r \le 0.25 \\ 0 & \text{otherwise} \end{cases} \end{cases} = 0$$

$$R_{d1} := \begin{cases} K_D & \text{if } D_r \le 0.25 \\ 4.0 \cdot K_\theta & \text{if } 0.25 < D_r \le 1 \ \text{ otherwise} \end{cases} = 5$$

$$R_{d2} := \begin{cases} K_D & \text{if } D_r \le 0.25 \\ 3.6 \cdot K_\theta & \text{if } 0.25 < D_r \le 1 \ \text{ otherwise} \end{cases} = 4.5$$

$$R_{d3} := \begin{cases} K_D & \text{if } D_r \le 0.25 \\ 3.2 \cdot K_\theta & \text{if } 0.25 < D_r \le 1 \ \text{ otherwise} \end{cases} = 4$$

$$Z_{Im} := \frac{D_r \cdot l_m \cdot F_{em}}{R_{d1}} = 818.79 \qquad Z_{Is} := \frac{D_r \cdot l_s \cdot F_{es}}{R_{d1}} = 1371.77 \qquad Z_{II} := \frac{k_1 \cdot D_r \cdot l_s \cdot F_{es}}{R_{d2}} = 389.46 \qquad Z_{IIIm} := \frac{k_2 \cdot D_r \cdot l_m \cdot F_{em}}{\left(1 + 2R_e\right) \cdot R_{d3}} = 449.19$$

$$Z_{IIIs} := \frac{k_3 \cdot D_r \cdot l_s \cdot F_{em}}{\left(2 + R_e\right) \cdot R_{d3}} = 274.66 \qquad Z_{IV} := \frac{D_r^2}{R_{d3}} \cdot \sqrt{\frac{2 \cdot F_{em} \cdot F_{yb}}{3 \cdot \left(1 + R_e\right)}} = 290.36$$

$$Z_1 := \min\left(Z_{Im}, Z_{Is}, Z_{II}, Z_{IIIm}, Z_{IIIs}, Z_{IV}\right) = 274.66$$

$$W_1 = 291.32$$

$$R_{pos} := \sqrt{T_{pos}^2 + V_{pos}^2} = 502.67\ lbf \qquad R_{neg} := \sqrt{T_{neg}^2 + V_{neg}^2} = 502.67\ lbf$$

$$\alpha_{pos} := \operatorname{atan}\left(T_{pos} \cdot V_{pos}^{-1}\right) = 57.51 \cdot deg \qquad \alpha_{neg} := \operatorname{atan}\left(T_{neg} \cdot V_{neg}^{-1}\right) = 57.51 \cdot deg$$

Results

$Z' := Z_1 \cdot C_D \cdot C_M \cdot C_t \cdot C_g \cdot C_\Delta \cdot C_{eg} \cdot C_{di} \cdot lbf = 274.66\ lbf$ **Allowable Shear**

$W' := W_1 \cdot C_D \cdot C_M \cdot C_t \cdot C_{eg} \cdot p_{ten} \cdot lbf = 764.72\ lbf$ **Allowable Tension**

$$Z_{\alpha pos} := \frac{W' \cdot Z'}{W' \cdot \left(\cos\left(\alpha_{pos}\right)\right)^2 + Z' \cdot \left(\sin\left(\alpha_{pos}\right)\right)^2} = 504.84\ lbf \qquad Int_{pos} := \frac{R_{pos}}{Z_{\alpha pos}} = 1$$

$$Z_{\alpha neg} := \frac{W' \cdot Z'}{W' \cdot \left(\cos\left(\alpha_{neg}\right)\right)^2 + Z' \cdot \left(\sin\left(\alpha_{neg}\right)\right)^2} = 504.84\ lbf \qquad Int_{neg} := \frac{R_{neg}}{Z_{\alpha neg}} = 1$$

Fastener = "1/2 in Lag Screw"
Predrill = "Predrill Holes at 40% - 70% D"
Penetration = "Verify Blocking Thickness"
Material = "Spruce Pine-Fir"

ANCHOR RESULTS

STRUCTURAL STEEL OPTION

- USE ½" DIAMETER THRU-BOLTS, W/ 3"x3"x¼ PLATE WASHERS, AND A MINIMUM OF 4 ANCHORS ON EACH SIDE (12 ANCHORS TOTAL)

CONCRETE OPTION

- USE ½" DIAMETER HILTI KWIK BOLT TZ ANCHORS WITH 3½" (MIN.) EMBEDMENT AND 3"x3"x¼" PLATE WASHERS. USE 8 ANCHORS (MIN.) ON EACH SIDE (28 ANCHORS TOTAL)

WOOD OPTION

- USE ½" DIAMETER LAG SCREWS W/ 4" (MIN.) PENITRATION INTO 4½" THICK SOLID BLOCKING (S-P-F OR BETTER) USE 8 ANCHORS (MIN.) ON EACH SIDE. (28 ANCHOR TOTAL)

CONNECTION UNIT TO TOP CURB

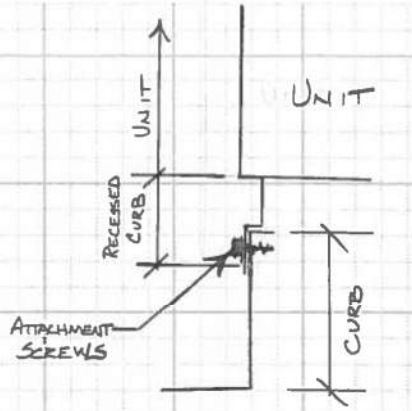

SECTION
N.T.S

REACTIONS

$E_H = 4,317^{\#}$ (SHEAR)

$R_T = 339^{\#}$ (TENSION)

NOTE:

- IT IS ASSUMED SHEAR FORCE WILL BE RESISTED BY 2 SIDES PARRALLEL TO THE SHEAR FORCE.
- TENSION & COMPRESSION FORCE WILL BE RESISTED BY ADJACENT SIDES

$$V = \frac{E_H}{2\ \text{SIDES}}$$

$$= \frac{4,317^{\#}}{2\ \text{SIDES}}$$

$$V = 2,159\ ^{\#}/\text{SIDE}$$

- TRY 1/4" DIAMETER ITW BUILDEX SCREW

$V_a = 463\ ^{\#}/\text{SCREW}$
$T_a = 191\ ^{\#}/\text{SCREW}$ } (PER ICC REPORT ESR-1976)

CALCULATE # OF SCREWS REQUIRED

$$N = \frac{V}{V_a}$$

$$= \frac{2,159^{\#}}{463\ ^{\#}/\text{SCREW}}$$

$N = 4.66 \approx 5 \Rightarrow$ USE (5) 1/4" ϕ BUILDEX SCREWS ON EACH SIDE (TYPICAL ALL 4 SIDES)

CHECK # REQUIRED FOR TENSION

$$N_T = \frac{R_T}{T_a}$$

$$= \frac{339^{\#}}{191\ ^{\#}/\text{SCREW}}$$

$N_T = 1.8 \approx 2 < 6$ REQ'D FOR SHEAR $\Rightarrow$ OK

RICE ENGINEERING
www.rice-inc.com
105 School Creek Trail
Luxemburg, WI 54217
Phone: (920) 617-1042
Fax: (920) 617-1100

Project Description:	Job No.:	R16-10-233		
CASRTU #2 & #3 SEISMIC CURB DESIGN	Engineer:	JGM	Sheet No.:	27
	Date:	11/14/16	Rev.	
	Chk By:		Date:	

TABLE 2—ALLOWABLE TENSILE PULL-OUT LOADS (P_{NOT}/Ω), pounds-force[1, 2, 3, 4, 5]

Steel F_u = 45 ksi, Applied Factor of Safety, Ω=3.0												
Screw Designation	Nominal Diameter (in.)	Design Thickness of Member Not in Contact with the Screw Head (in)										
		0.018	0.024	0.030	0.036	0.048	0.060	0.075	0.105	0.125	0.187	0.250
10-16	0.190	44	58	73	87	116	145	182	254	303	[6]	[6]
12-14, 12-24	0.216	50	66	83	99	132	165	207	289	344	515	689
$^1/_4$-14, $^1/_4$-28	0.250	57	77	96	115	153	191	239	335	398	596	797

For **SI:** 1 inch = 25.4 mm, 1 lbf = 4.4 N, 1 ksi = 6.89 MPa.

[1]For tension connections, the least of the allowable pull-out, pullover, and fastener tension strength found in Tables 2, 3, and 5, respectively, must be used for design.
[2]ANSI/ASME standard screw diameters were used in the calculations and are listed in the tables.
[3]The allowable pull-out capacity for other member thickness can be determined by interpolating within the table.
[4]To calculate LRFD values, multiply values in table by the ASD safety factor of 3.0 and multiply again with the LRFD Φ factor of 0.5.
[5]For F_u = 58 ksi, multiply values by 1.29; for F_u = 65 ksi, multiply values by 1.44.
[6]Outside drilling capacity limits.

TABLE 3—ALLOWABLE TENSILE PULLOVER LOADS (P_{NOV}/Ω), pounds-force[1, 2, 3, 4, 5]

Steel Fu = 45 ksi, Applied Factor of Safety, Ω=3.0													
Screw Designation	Nominal Diameter (in.)	Head or Integral Washer Diameter (in.)	Design Thickness of Member in Contact with the Screw Head (in)										
			0.018	0.024	0.030	0.036	0.048	0.060	0.075	0.105	0.125	0.187	0.250
Hex Washer Head (HWH)													
10-16	0.190	0.400	162	216	270	324	432	540	675	945	1125	[6]	[6]
12-14, 12-24	0.216	0.415	168	224	280	336	448	560	700	980	1167	1746	2334
$^1/_4$-14, $^1/_4$-28	0.250	0.500	203	270	338	405	540	675	844	1181	1406	2104	2813
HWH with Serrations													
10-16	0.190	0.435	176	235	294	352	470	587	734	1028	1223	[6]	[6]
$^1/_4$-14	0.250	0.610	203	270	338	405	540	675	844	1181	1406	2104	[6]
Phillips Pan Head													
10-16	0.190	0.365	148	197	246	296	394	493	616	862	1027	[6]	[6]

For **SI:** 1 inch = 25.4 mm, 1 lbf = 4.4 N, 1 ksi = 6.89 MPa.

[1]For tension connections, the lower of the allowable pull-out, pullover, and fastener tension strength found in Tables 2, 3, and 5, respectively must be used for design.
[2]ANSI/ASME standard screw diameters were used in the calculations and are listed in the tables.
[3]The allowable pull-over capacity for other member thickness can be determined by interpolating within the table.
[4]To calculate LRFD values, multiply values in table by the ASD safety factor of 3.0 and multiply again with the LRFD Φ factor of 0.5.
[5]For Fu = 58 ksi, multiply values by 1.29; for Fu = 65 ksi, multiply values by 1.44.
[6]Outside drilling capacity limits.

TABLE 4—ALLOWABLE SHEAR (BEARING) CAPACITY (P_{NS}/Ω), pounds-force[1, 2, 3, 4, 5]

Steel Fu = 45 ksi, Applied Factor of Safety, Ω=3.0														
Screw Designation	Nominal Diameter (in.)	Design Thickness of Member Not in Contact with the Screw Head (in)	Design Thickness of Member in Contact with the Screw Head (in)										
			0.018	0.024	0.030	0.036	0.048	0.060	0.075	0.105	0.125	0.187	0.250
10-16	0.190	0.018	66	66	66	66	66	66	66	66	66		
		0.024	102	102	102	102	102	102	102	102	102		
		0.030	111	143	143	143	143	143	143	143	143		
		0.036	120	152	185	188	188	188	188	188	188		
		0.048	139	168	199	228	289	289	289	289	289		
		0.060	139	185	213	239	327	404	404	404	404		
		0.075	139	185	231	251	337	427	564	564	564		
		0.105	139	185	231	277	356	436	570	808	808		
		0.125	139	185	231	277	369	442	571	808	962		
12-14 12-24	0.216	0.018	71	71	71	71	71	71	71	71	71	71	71
		0.024	109	109	109	109	109	109	109	109	109	109	109
		0.030	125	152	152	152	152	152	152	152	152	152	152
		0.036	136	170	205	200	200	200	200	200	200	200	200
		0.048	157	190	223	253	308	308	308	308	308	308	308
		0.060	157	210	240	266	362	430	430	430	430	430	430
		0.075	157	210	262	282	375	468	601	601	601	601	601
		0.105	157	210	262	315	402	483	624	919	919	919	919
		0.125	157	210	262	315	420	494	629	919	1094	1094	1094
		0.187	157	210	262	315	420	525	642	919	1094	1636	1636
		0.250	157	210	262	315	420	525	656	919	1094	1636	2187
$^1/_4$-14 $^1/_4$-28[6]	0.250	0.018	76	76	76	76	76	76	76	76	76	76	76
		0.024	117	117	117	117	117	117	117	117	117	117	117
		0.030	142	164	164	164	164	164	164	164	164	164	164
		0.036	156	193	215	215	215	215	215	215	215	215	215
		0.048	182	218	253	283	331	331	331	331	331	331	331
		0.060	182	243	276	300	406	463	463	463	463	463	463
		0.075	182	243	304	322	424	521	647	647	647	647	647
		0.105	182	243	304	365	461	544	694	1063	1063	1063	1063
		0.125	182	243	304	365	486	560	703	1063	1266	1266	1266
		0.187	182	243	304	365	486	608	731	1063	1266	1893	1893
		0.250	182	243	304	365	486	608	759	1063	1266	1893	2531

For **SI:** 1 inch = 25.4 mm, 1 lbf = 4.4 N, 1 ksi = 6.89 MPa.

[1]The lower of the allowable shear (bearing) and the allowable fastener shear strength found in Tables 4 and 5, respectively, must be used for design.
[2]ANSI/ASME standard screw diameters were used in the calculations and are listed in the tables.
[3]The allowable bearing capacity for other member thickness can be determined by interpolating within the table.
[4]To calculate LRFD values, multiply values in table by the ASD safety factor of 3.0 and multiply again with the LRFD Φ factor of 0.5.
[5]For F_u = 58 ksi, multiply values by 1.29; for F_u = 65 ksi, multiply values by 1.44.
[6]Shear values do not apply to 5, 6 and 8-inch-long $^1/_4$-28 screws, due to the fact that they are not fully threaded.

TABLE 5—FASTENER STRENGTH OF SCREWS[1, 2, 3, 4, 5]

SCREW DESIGNATION	DIAMETER (in.)	ALLOWABLE FASTENER STRENGTH		NOMINAL FASTENER STRENGTH	
		Tensile, P_{ts}/Ω (lb)	Shear, P_{ss}/Ω (lb)	Tensile, P_{ts} (lb)	Shear, P_{ss} (lb)
10-16	0.190	885	573	2654	1718
12-14	0.216	1184	724	3551	2171
12-24	0.216	1583	885	4750	2654
$^1/_4$-14	0.250	1605	990	4816	2970
$^1/_4$-28	0.250	1922	1308	5767	3925

For **SI:** 1 inch = 25.4 mm, 1 lbf = 4.4 N, 1 ksi = 6.89 MPa.

[1]For tension connections, the least of the allowable pull-out, pullover, and fastener tension strength found in Tables 2, 3, and 5, respectively, must be used for design.
[2]For shear connection, the lower of the allowable shear (bearing) and the allowable fastener shear strength found in Table 4 and 5, respectively, must be used for design.
[3]See Section 4.1 for fastener spacing and end distance requirements.
[4]Nominal strengths are based on laboratory tests;
[5]To calculate LRFD values, multiply nominal strength values by the LRFD Φ factor of 0.5.

Seismic Unit #2 (USA)	Detail Ref.	Sheet No:

Inputs:

Seismic Design Force for Non-Structural Components: (CH. 13 ASCE 7-10):

$S_s := 370\%$ Mapped Spectral Response Acceleration at Short Periods (Figure 22-1)

$S_1 := 125\%$ Mapped Spectral Response Acceleration at Long Periods (Figure 22-2)

SSC = > D Soil Site Class (Assume Site Class "D" if Unknown per Section 20.1)

RC = > II Risk Category (Table 1.5-1)

MECHANICAL AND ELECTRICAL COMPONENTS	a_p [a]	R_p [b]
Roof-mounted stacks, cooling and electrical towers laterally braced below their center of mass.	2 ½	3

$a_p := 2.5$ Component and Anchor Amplification Factor (Table 13.5-1)

$R_p := 3$ Component and Anchor Response Modification Factor (Table 13.5-1)

$z := 1$ Height in Structure of Point of Attachment of Component With Respect to Base

$h := 1$ Average Roof Height of Structure With Respect to the Base

$W_p := 1650$ lbs. (Max. Weight of Component)

Calculations:

All Calculations Below This Line Are Automatic

$\rho := 1.0$ Redundancy Factor (See Section 12.3.4)

$F_a = 1.00$ Short-Period Site Coefficient (Table 11.4-1)

$F_v = 1.50$ Long-Period Site Coefficient (Table 11.4-2)

$S_{DS} := (2 \div 3) \cdot F_a \cdot S_s = 247 \cdot \%$ Design Spectral Response Acceleration at Short Period (Eqn 11.4-3)

$S_{D1} := (2 \div 3) \cdot F_v \cdot S_1 = 125 \cdot \%$ Design Spectral Response Acceleration At Long Period (Eqn 11.4-4)

$I_p = 1$ Component Importance Factor (See Section 13.1.3)

$$f_p := \frac{0.4 \cdot a_p \cdot S_{DS}}{R_p \div I_p} \cdot \left[1 + \left[2 \cdot \left(\frac{z}{h}\right)\right]\right] = 2.47$$ (Eqn 13.3-1 with W_p Excluded)

$F_{pmin} := 0.3 \cdot S_{DS} \cdot I_p = 0.74$ (Eqn 13.3-3)

$F_{pmax} := 1.6 \cdot S_{DS} \cdot I_p = 3.95$ (Eqn 13.3-2)

$$F_{punit} := \begin{cases} F_{pmin} & \text{if } f_p < F_{pmin} \\ F_{pmax} & \text{if } f_p > F_{pmax} \\ f_p & \text{otherwise} \end{cases} = 2.47$$

$F_{punit} = 2.47$ Unfactored Unit Seismic Lateral Force

$F_{pvunit} := 0.2 \cdot S_{DS} = 0.49$ Unfactored Unit Seismic Vertical Force

$F_p := F_{punit} \cdot W_p \cdot unit = 28.26$ psi Unfactored Seismic Lateral Force

$D := W_p \cdot unit = 11.46$ psi Unfactored Component Dead Loads

Seismic Design Category (SDC) per ASCE 7 Section 11.6 SDC = "E"

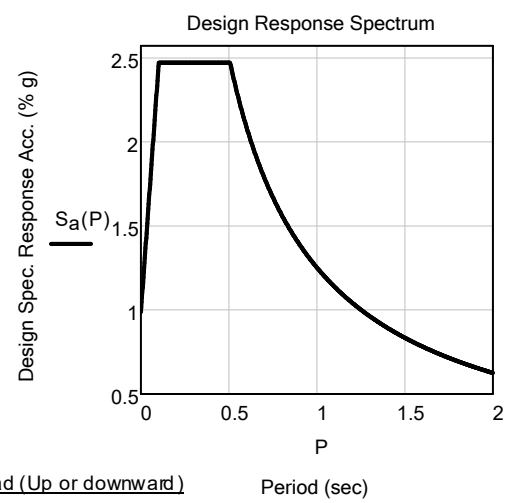

Seismic Forces on Component/Anchors

	Seismic Lateral Load	Seismic Vertical Load (Up or downward)
ASD:	$E_{hASD} := 0.7 \rho \cdot F_{punit} \cdot W_p = 2849.00$ lbs	$E_{vASD} := 0.7(0.2 \cdot S_{DS}) \cdot W_p = 569.80$ lbs
LRFD:	$E_{hLRFD} := \rho \cdot F_{punit} \cdot W_p = 4070.00$ lbs	$E_{vLRFD} := (0.2 \cdot S_{DS}) \cdot W_p = 814.00$ lbs

RICE ENGINEERING	105 School Creek Trail Luxemburg, WI 54217 Phone: (920)845-1042 Fax: (920)845-1048 www.rice-inc.com	Project Description:	Job No: R16-10-233	
		CASTRU 2 and 3 Seismic Curb	Engineer: JGM	Sheet No: 30
			Date: 11/7/16	Rev:
Template: REI-MC-1040			Chk By:	Date:

UNIT #2 - SEISMIC LOAD (CONT.)

SEISMIC RESULTS

$E_{H2} = 2,849^{\#}$ (HORIZONTAL)
$E_{V2} = 570^{\#}$ (VERTICAL)
} FROM UNIT #2 SEISMIC RESULTS

CALCULATE SEISMIC OVERTURNING

NOTE:

IT IS ASSUMED THE VERTICAL CENTER OF GRAVITY (C.O.G) IS AT MID-HEIGHT AND SEISMIC LOAD WILL BE APPLIED AT MID-HEIGHT.

$H_1 = 45''$ - UNIT HEIGHT
$+ 3\frac{1}{2}''$ - RESCESSED CURB
$H_T = 48\frac{1}{2}''$

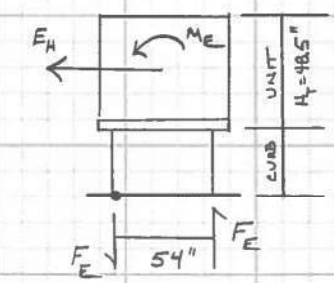

$$M_E = (2,849^{\#})\left(\frac{48.5''}{2}\right)$$

$$M_E = 69,088^{\text{IN.}\#}$$

CONVERT TO FORCE COUPLE

$x = 54''$ (SHORT DIRECTION WILL CONTROL)

$$F_E = \frac{M_E}{x} = \frac{69,088^{\text{IN.}\#}}{54^{\text{IN}}}$$

$$F_E = \pm 1,279^{\#}$$ (TENSION OR COMPRESSION)

UNIT #2 - SEISMIC LOAD (CONT.)

CALCULATE RESISTING MOMENTS

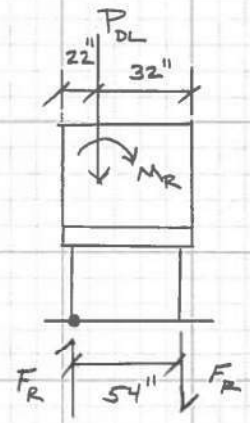

$P_{DL} = 1{,}650^{\#}$

- USING FULL DL = 1.0 DL

$M_{R_1} = 1{,}650^{\#}(22^{IN})$

$M_{R_1} = 36{,}300^{IN.\#}$

CONVERT TO FORCE COUPLE

$$F_{R1} = \frac{M_R}{X} = \frac{36{,}300^{IN.\#}}{54''}$$

$F_{R1} = 672^{\#}$ (MAXIMUM RESISTANCE)

- USING 0.60 DL

$M_{R2} = (0.60)(1{,}650^{\#})(22^{IN})$

$M_{R2} = 21{,}780^{IN-\#}$

CONVERT TO FORCE COUPLE

$$F_{R2} = \frac{M_{R2}}{X} = \frac{21{,}780^{IN.\#}}{54^{IN}}$$

$F_{R2} = 403^{\#}$ (MINIMUM RESISTANCE)

LOAD COMBINATIONS

#5) 1.0 DL + 0.7E
#8) 0.60 DL + 0.7E

(PER ASCE 7-10 SECTION 2.4.1)

UNIT #2 - SEISMIC LOAD (CONT.)

CALCULATE MAX. COMPRESSION AND TENSION.

COMPRESSION

- FOR 1.0 DL + 0.7E

NOTE:
- F_E HAS 0.7 REDUCTION INCLUDED

$$R_{C1} = \frac{F_E - F_{R1}}{2 \text{ CORNERS}} + P_{DL(MAX)} + E_V$$

UNIT CORNER DL

$$= \frac{1{,}279^{\#} - 672^{\#}}{2} + 537^{\#} + 570\left(\frac{537^{\#}}{1650^{\#}}\right)$$

$P_{DL(MAX)} = 537^{\#}$, $P_{DL(MIN)} = 303^{\#}$ } PER UNIT CUT SHEET

$$R_{C1} = 1{,}026^{\#} \Leftarrow \text{CONTROLS (COMPRESSION)}$$

- FOR 0.60 DL + 0.7E

$$R_{C2} = \frac{F_E - F_{R2}}{2 \text{ CORNERS}} + 0.60 P_{DL(MAX)} + E_V$$

RATIO E_V BY CORNER DL

$$= \frac{1{,}279^{\#} - 403^{\#}}{2} + 0.60(537^{\#}) + 570\left(\frac{537^{\#}}{1650^{\#}}\right)$$

$$R_{C2} = 946^{\#}$$

TENSION

- FOR 0.60 DL + 0.7E (COMBO WILL CONTROL FOR TENSION

$$R_T = \frac{F_E - F_{R2}}{2 \text{ CORNERS}} - 0.60\, DL_{(MIN)} + E_V$$

$$= \frac{1{,}279 - 403^{\#}}{2} - 0.60(303^{\#}) + 570\left(\frac{303^{\#}}{1650^{\#}}\right)$$

$$R_T = 361^{\#} \text{ (TENSION)}$$

- SINCE UNIT #2 REACTIONS ARE LESS THAN UNIT #3 REACTIONS, THEREFORE CURB AND ANCHORS DESIGN FROM UNIT #3 WILL ALSO WORK FOR UNIT #2

How Many? A Dictionary of Units of Measurement
© Russ Rowlett and the University of North Carolina at Chapel Hill

Table of Contents
About the Dictionary
Using the Dictionary

Sheet Metal Thickness Gauges

Steel data from Caloritech, for heavier gauges also from Engineer's Edge. Aluminum data from Festiva Tech.

Gauge (ga)	Standard Steel Thickness (inches)	Galvanized Steel Thickness (inches)	Aluminum Thickness (inches)
3	0.2391		0.2294
4	0.2242		0.2043
5	0.2092		0.1819
6	0.1943		0.1620
7	0.1793		0.1443
8	0.1644		0.1285
9	0.1495	0.1532	0.1144
10	0.1345	0.1382	0.1019
11	0.1196	0.1233	0.0907
12	0.1046	0.1084	0.0808
13	0.0897	0.0934	0.0720
14	0.0747	0.0785	0.0641
15	0.0673	0.0710	0.0571
16	0.0598	0.0635	0.0508
17	0.0538	0.0575	0.0453
18	0.0478	0.0516	0.0403
19	0.0418	0.0456	0.0359
20	0.0359	0.0396	0.0320
21	0.0329	0.0366	0.0285
22	0.0299	0.0336	0.0253
23	0.0269	0.0306	0.0226
24	0.0239	0.0276	0.0201
25	0.0209	0.0247	0.0179
26	0.0179	0.0217	0.0159
27	0.0164	0.0202	0.0142
28	0.0149	0.0187	0.0126
29	0.0135	0.0172	0.0113
30	0.0120	0.0157	0.0100
31	0.0105	0.0142	0.0089
32	0.0097	0.0134	0.0080
33	0.0090		0.0071
34	0.0082		0.0063
35	0.0075		0.0056
36	0.0067		

Return to the Dictionary Contents page.

ICC EVALUATION SERVICE

Most Widely Accepted and Trusted

ICC-ES Report

ICC-ES | (800) 423-6587 | (562) 699-0543 | www.icc-es.org

ESR-1976

Reissued 07/2016
This report is subject to renewal 07/2018.

DIVISION: 05 00 00—METALS
SECTION: 05 05 23—METAL FASTENINGS

REPORT HOLDER:

ITW BUILDEX

700 HIGH GROVE BOULEVARD
GLENDALE HEIGHTS, ILLINOIS 60139

EVALUATION SUBJECT:

ITW BUILDEX TEKS® SELF-DRILLING FASTENERS

Look for the trusted marks of Conformity!

"2014 Recipient of Prestigious Western States Seismic Policy Council (WSSPC) Award in Excellence"

A Subsidiary of INTERNATIONAL CODE COUNCIL

ICC-ES Evaluation Reports are not to be construed as representing aesthetics or any other attributes not specifically addressed, nor are they to be construed as an endorsement of the subject of the report or a recommendation for its use. There is no warranty by ICC Evaluation Service, LLC, express or implied, as to any finding or other matter in this report, or as to any product covered by the report.

Copyright © 2016 ICC Evaluation Service, LLC. All rights reserved.

ICC-ES Evaluation Report

ESR-1976

Reissued July 2016

This report is subject to renewal July 2018.

www.icc-es.org | (800) 423-6587 | (562) 699-0543 *A Subsidiary of the International Code Council®*

DIVISION: 05 00 00—METALS
Section: 05 05 23—Metal Fastenings

REPORT HOLDER:

ITW BUILDEX
700 HIGH GROVE BOULEVARD
GLENDALE HEIGHTS, ILLINOIS 60139
(800) 848-5611
www.itwbuildex.com
technical@itwccna.com

EVALUATION SUBJECT:

ITW BUILDEX TEKS® SELF-DRILLING FASTENERS

1.0 EVALUATION SCOPE

Compliance with the following codes:

- 2015, 2012, 2009 and 2006 *International Building Code®* (IBC)
- 2015, 2012, 2009 *International Residential Code®* (IRC)
- 2013 *Abu Dhabi International Building Code* (ADIBC)†

†The ADIBC is based on the 2009 IBC. 2009 IBC code sections referenced in this report are the same sections in the ADIBC.

Property evaluated:

Structural

2.0 USES

The ITW Buildex TEKS® Self-drilling Fasteners described in this report are used in engineered or code-prescribed connections of cold-formed steel framing and of sheet steel sheathing to cold-formed steel framing.

3.0 DESCRIPTION

3.1 General:

ITW Buildex TEKS® Self-drilling Fasteners are self-drilling tapping screws complying with the material, process, and performance requirements of ASTM C1513. The screws have either a hex washer head (HWH), an HWH with serrations, or a Phillips® (Type II) pan head. The screws are fully threaded, except where noted in Table 1, and the screws' threads comply with ASME B18.6.4, and the screws' drill points and flutes are proprietary and are designated as TEKS/1, TEKS/2, TEKS/3, TEKS/4, TEKS/4.5, and TEKS/5. The screws have nominal sizes of No.10 (0.190 inch), No.12 (0.216 inch), and $^1/_4$ inch (0.250 inch), and lengths from $^1/_2$ inch to 8 inches (12.70 mm to 203.20 mm). See Figures 1 through 3 for depictions of the screws. Table 1 provides screw descriptions (size, tpi, length), nominal diameters, head style, head diameters, point styles, drilling capacity ranges, length of load-bearing area and coatings.

3.2 Material:

ITW Buildex TEKS® Self-drilling Fasteners are case-hardened from carbon steel conforming to ASTM A510, Grades 1018 to 1022, and are heat-treated and case-hardened to give them a hard outer surface necessary to cut internal threads in the joint material. Screws are coated with corrosion preventive coating identified as Climaseal®, or are plated with electrodeposited zinc (E-Zinc) complying with the minimum corrosion resistance requirements of ASTM F1941.

3.3 Cold-formed Steel:

Cold-formed steel material must comply with one of the ASTM specifications listed in Section A2.1.1 of AISI S100-12 and have the minimum specified tensile strengths shown in the tables in this report.

4.0 DESIGN AND INSTALLATION

4.1 Design:

4.1.1 General: Screw thread length and point style must be selected on the basis of thickness of the fastened material and thickness of the supporting steel, respectively, based on the length of load-bearing area (see Figure 4) and drilling capacity given in Table 1.

When tested for corrosion resistance in accordance with ASTM B117, the screws meet the minimum requirement listed in ASTM F1941, as required by ASTM C1513, with no white corrosion after three hours and no red rust after 12 hours.

4.1.2 Prescriptive Design: ITW Buildex TEKS Self-drilling Fasteners described in Section 3.1 are recognized for use where ASTM C1513 screws of the same size and head style/dimension are prescribed in the IRC and in the AISI standards referenced in IBC Section 2210.

4.1.3 Engineered Design: ITW Buildex TEKS® Self-drilling Fasteners are recognized for use in engineered connections of cold-formed steel construction. Design of the connection must comply with Section E4 of AISI S100 (AISI-NAS for the 2006 IBC), using the nominal and allowable fastener tension and shear strength for the screws, shown in Table 5. Allowable connection strength for use in Allowable Strength Design (ASD) for pull-out, pullover, and shear (bearing) capacity for common sheet steel thicknesses are provided in Tables 2, 3, and 4, respectively, based upon calculations in accordance with

ICC-ES Evaluation Reports are not to be construed as representing aesthetics or any other attributes not specifically addressed, nor are they to be construed as an endorsement of the subject of the report or a recommendation for its use. There is no warranty by ICC Evaluation Service, LLC, express or implied, as to any finding or other matter in this report, or as to any product covered by the report.

Copyright © 2016 ICC Evaluation Service, LLC. All rights reserved.

AISI S100 (AISI-NAS for the 2006 IBC). Instructions on how to calculate connection design strengths for use in Load Resistance Factor Design (LRFD) are found in the footnotes of these tables. The connection strength values are applicable to connections where the connected steel elements are in direct contact with one another. For connections subject to tension, the least of the allowable pullout, pullover, and fastener tension strength found in Tables 2, 3 and 5, respectively, must be used for design. For connections subject to shear, the lesser of the fastener shear strength and allowable shear (bearing) found in Tables 5 and 4, respectively, must be used for design. Design provisions for tapping screw connections subjected to combined shear and tension loading are outside the scope of this report.

For screws used in framing connections, in order for the screws to be considered fully effective, the minimum spacing between the fasteners and the minimum edge distance must be three times the nominal diameter of the screws, except when the edge is parallel to the direction of the applied force, the minimum edge distance must be 1.5 times the nominal screw diameter. When the spacing between screws is 2 times the fastener diameter, the connection shear strength values in Table 4 must be reduced by 20 percent (Refer to Section D1.5 of AISI S200).

For screws used in applications other than framing connections, the minimum spacing between the fasteners must be three times the nominal screw diameter and the minimum edge and end distance must be 1.5 times the nominal screw diameter. Additionally, under the 2009 and 2006 IBC, when the distance to the end of the connected part is parallel to the line of the applied force, the allowable connection shear strength determined in accordance with Section E4.3.2 of Appendix A of AISI S100-07 or AISI-NAS, as applicable, must be considered.

Connected members must be checked for rupture in accordance with Section E6 of AISI S100-12 for the 2015 IBC (Section E5 of AISI S100-07/S2-10 for the 2012 IBC; Section E5 of AISI S100-07 for the 2009 IBC).

4.2 Installation:

Installation of ITW Buildex TEKS® Self-drilling Fasteners must be in accordance with the manufacturer's published installation instructions and this report. The manufacturer's published installation instructions must be available at the jobsite at all times during installation.

The screws must be installed perpendicular to the work surface, using a screw driving tool. The installation speed for $^1/_4$-inch TEKS/3, $^1/_4$-inch TEKS/5, and #12 TEKS/5 screws should not exceed 1,800 rpm; the installation speed for all other screws should not exceed 2,500 rpm. The screw must penetrate through the supporting steel with a minimum of three threads protruding past the back side of the supporting steel.

5.0 CONDITIONS OF USE

The ITW Buildex TEKS® Self-drilling Fasteners described in this report comply with, or are suitable alternatives to what is specified in, those codes listed in Section 1.0 of this report, subject to the following conditions:

5.1 Fasteners must be installed in accordance with the manufacturer's published installation instructions and this report. In the event of a conflict between this report and the manufacturer's published installation instructions, this report governs.

5.2 The utilization of the nominal strength values contained in this evaluation report, for the design of cold-formed steel diaphragms, is outside the scope of this report.

5.3 The allowable load values (ASD) specified in Section 4.1 for screws or for screw connections are not permitted to be increased for short-duration loads, such as wind or earthquake loads.

5.4 Drawings and calculations verifying compliance with this report and the applicable code must be submitted to the code official for approval. The drawings and calculations are to be prepared by a registered design professional when required by the statutes of the jurisdiction in which the project is to be constructed.

6.0 EVIDENCE SUBMITTED

Data in accordance with the ICC-ES Acceptance Criteria for Tapping Screw Fasteners (AC118), dated February 2016.

7.0 IDENTIFICATION

ITW Buildex TEKS® Self-drilling Fastener heads are marked with "BX" as shown in Figures 1 through 3. Each box of fasteners has a label bearing the company name (ITW Buildex), fastener description (model, point type, diameter and length), lot number, and the evaluation report number (ESR-1976).

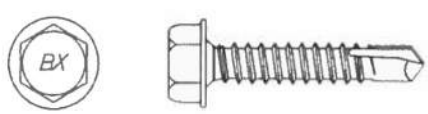

FIGURE 1—HEX WASHER HEAD (HWH)

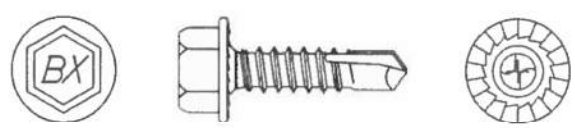

FIGURE 2—HWH WITH SERRATIONS

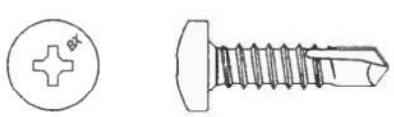

FIGURE 3—PHILLIPS PAN HEAD

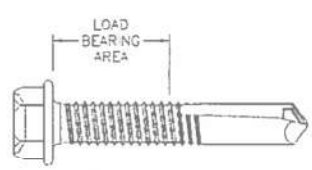

FIGURE 4—LENGTH OF LOAD-BEARING AREA

TABLE 1—TESK® SELF-DRILLING TAPPING SCREWS[1]

DESCRIPTION (nom. size-tpi x length)	NOMINAL DIAMETER (inch)	HEAD STYLE	HEAD DIAMETER (inch)	DRILL POINT	DRILLING CAPACITY[3] (in.)		LENGTH OF LOAD BEARING AREA[4] (inch)	COATING
					Min.	Max.		
10-16 x 3/4"	0.190	HWH	0.400	TEKS/1	0.018	0.095	0.220	Climaseal
12-14 x 3/4"	0.216	HWH	0.415	TEKS/1	0.018	0.095	0.205	Climaseal
1/4-14 x 7/8"	0.250	HWH	0.415	TEKS/1	0.018	0.095	0.380	Climaseal
10-16 x 1/2"	0.190	Pan	0.365	TEKS/3	0.036	0.175	0.150	Climaseal
10-16 x 5/8"	0.190	Pan	0.365	TEKS/3	0.036	0.175	0.200	Climaseal
10-16 x 3/4"	0.190	Pan	0.365	TEKS/3	0.036	0.175	0.325	Climaseal
10-16 x 1/2"	0.190	HWH	0.400	TEKS/3	0.036	0.175	0.150	Climaseal
10-16 x 5/8"	0.190	HWH	0.400	TEKS/3	0.036	0.175	0.200	Climaseal
10-16 x 3/4"	0.190	HWH	0.400	TEKS/3	0.036	0.175	0.325	Climaseal
10-16 x 1"	0.190	HWH	0.400	TEKS/3	0.036	0.175	0.575	Climaseal
10-16 x 1"	0.190	Pan	0.365	TEKS/3	0.036	0.175	0.575	Climaseal
10-16 x 1 1/4"	0.190	HWH	0.400	TEKS/3	0.036	0.175	0.825	Climaseal
10-16 x 1 1/2"	0.190	HWH	0.400	TEKS/3	0.036	0.175	1.075	Climaseal
10-16 x 3/4"	0.190	HWH[2]	0.435	TEKS/3	0.036	0.175	0.323	E-Zinc
12-14 x 3/4"	0.216	HWH	0.415	TEKS/3	0.036	0.210	0.270	Climaseal
12-14 x 1"	0.216	HWH	0.415	TEKS/3	0.036	0.210	0.520	Climaseal
12-14 x 1 1/4"	0.216	HWH	0.415	TEKS/2	0.036	0.210	0.550	Climaseal
12-14 x 1 1/2"	0.216	HWH	0.415	TEKS/2	0.036	0.210	0.800	Climaseal
12-14 x 2"	0.216	HWH	0.415	TEKS/3	0.036	0.210	1.450	Climaseal
12-14 x 2 1/2"	0.216	HWH	0.415	TEKS/3	0.036	0.210	1.950	Climaseal
12-14 x 3"	0.216	HWH	0.415	TEKS/3	0.036	0.210	2.450	Climaseal
12-14 x 4"	0.216	HWH	0.415	TEKS/3	0.036	0.210	3.450	Climaseal
1/4-14 x 3/4"	0.250	HWH	0.500	TEKS/3	0.036	0.210	0.210	Climaseal
1/4-14 x 1"	0.250	HWH	0.500	TEKS/3	0.036	0.210	0.400	Climaseal
1/4-14 x 1 1/4"	0.250	HWH	0.500	TEKS/3	0.036	0.210	0.650	Climaseal
1/4-14 x 1 1/2"	0.250	HWH	0.500	TEKS/3	0.036	0.210	0.900	Climaseal
1/4-14 x 2"	0.250	HWH	0.500	TEKS/3	0.036	0.210	1.400	Climaseal
1/4-14 x 2 1/2"	0.250	HWH	0.500	TEKS/3	0.036	0.210	1.900	Climaseal
1/4-14 x 3"	0.250	HWH	0.500	TEKS/3	0.036	0.210	2.400	Climaseal
1/4-14 x 4"	0.250	HWH	0.500	TEKS/3	0.036	0.210	3.400	Climaseal
1/4-14 x 3/4"	0.250	HWH[2]	0.610	TEKS/3	0.036	0.210	0.250	Climaseal
1/4-14 x 1"	0.250	HWH[2]	0.610	TEKS/3	0.036	0.210	0.500	Climaseal
12-24 x 7/8"	0.216	HWH	0.415	TEKS/4	0.125	0.250	0.325	Climaseal
12-24 x 1 1/4"	0.216	HWH	0.415	TEKS/4.5	0.125	0.375	0.575	Climaseal
12-24 x 1 1/4"	0.216	HWH	0.415	TEKS/5	0.125	0.500	0.375	Climaseal
12-24 x 1 1/2"	0.216	HWH	0.415	TEKS/5	0.125	0.500	0.625	Climaseal
12-24 x 2"	0.216	HWH	0.415	TEKS/5	0.125	0.500	1.125	Climaseal
1/4-28 x 3"	0.250	HWH	0.415	TEKS/5	0.125	0.500	2.150	Climaseal
1/4-28 x 4"	0.250	HWH	0.415	TEKS/5	0.125	0.500	3.150	Climaseal
1/4-28 x 5"[5]	0.250	HWH	0.605	TEKS/5	0.125	0.500	4.150	Climaseal
1/4-28 x 6"[5]	0.250	HWH	0.605	TEKS/5	0.125	0.500	5.150	Climaseal
1/4-28 x 8"[5]	0.250	HWH	0.605	TEKS/5	0.125	0.500	7.150	Climaseal

For **SI:** 1 inch = 25.4 mm.

[1] Screw dimensions comply with ASME B18.6.4 (nom. size = nominal screw size, tip = threads per inch, length = inches).
[2] HWH with serrations.
[3] Drilling capacity refers to the minimum and maximum total allowable thicknesses of material the fastener is designed to drill through, including any space between the layers.
[4] Length of load-bearing area is the total screw length minus the length from the screw point to the third full thread. See Figure 4.
[5] Partially threaded.

TABLE 2—ALLOWABLE TENSILE PULL-OUT LOADS (P_{NOT}/Ω), pounds-force[1, 2, 3, 4, 5]

Steel F_u = 45 ksi, Applied Factor of Safety, Ω=3.0												
Screw Designation	Nominal Diameter (in.)	Design Thickness of Member Not in Contact with the Screw Head (in)										
		0.018	0.024	0.030	0.036	0.048	0.060	0.075	0.105	0.125	0.187	0.250
10-16	0.190	44	58	73	87	116	145	182	254	303	[6]	[6]
12-14, 12-24	0.216	50	66	83	99	132	165	207	289	344	515	689
$^1/_4$-14, $^1/_4$-28	0.250	57	77	96	115	153	191	239	335	398	596	797

For **SI:** 1 inch = 25.4 mm, 1 lbf = 4.4 N, 1 ksi = 6.89 MPa.

[1]For tension connections, the least of the allowable pull-out, pullover, and fastener tension strength found in Tables 2, 3, and 5, respectively, must be used for design.
[2]ANSI/ASME standard screw diameters were used in the calculations and are listed in the tables.
[3]The allowable pull-out capacity for other member thickness can be determined by interpolating within the table.
[4]To calculate LRFD values, multiply values in table by the ASD safety factor of 3.0 and multiply again with the LRFD Φ factor of 0.5.
[5]For F_u = 58 ksi, multiply values by 1.29; for F_u = 65 ksi, multiply values by 1.44.
[6]Outside drilling capacity limits.

TABLE 3—ALLOWABLE TENSILE PULLOVER LOADS (P_{NOV}/Ω), pounds-force[1, 2, 3, 4, 5]

Steel Fu = 45 ksi, Applied Factor of Safety, Ω=3.0													
Screw Designation	Nominal Diameter (in.)	Head or Integral Washer Diameter (in.)	Design Thickness of Member in Contact with the Screw Head (in)										
			0.018	0.024	0.030	0.036	0.048	0.060	0.075	0.105	0.125	0.187	0.250
Hex Washer Head (HWH)													
10-16	0.190	0.400	162	216	270	324	432	540	675	945	1125	[6]	[6]
12-14, 12-24	0.216	0.415	168	224	280	336	448	560	700	980	1167	1746	2334
$^1/_4$-14, $^1/_4$-28	0.250	0.500	203	270	338	405	540	675	844	1181	1406	2104	2813
HWH with Serrations													
10-16	0.190	0.435	176	235	294	352	470	587	734	1028	1223	[6]	[6]
$^1/_4$-14	0.250	0.610	203	270	338	405	540	675	844	1181	1406	2104	[6]
Phillips Pan Head													
10-16	0.190	0.365	148	197	246	296	394	493	616	862	1027	[6]	[6]

For **SI:** 1 inch = 25.4 mm, 1 lbf = 4.4 N, 1 ksi = 6.89 MPa.

[1]For tension connections, the lower of the allowable pull-out, pullover, and fastener tension strength found in Tables 2, 3, and 5, respectively must be used for design.
[2]ANSI/ASME standard screw diameters were used in the calculations and are listed in the tables.
[3]The allowable pull-over capacity for other member thickness can be determined by interpolating within the table.
[4]To calculate LRFD values, multiply values in table by the ASD safety factor of 3.0 and multiply again with the LRFD Φ factor of 0.5.
[5]For Fu = 58 ksi, multiply values by 1.29; for Fu = 65 ksi, multiply values by 1.44.
[6]Outside drilling capacity limits.

TABLE 4—ALLOWABLE SHEAR (BEARING) CAPACITY (P_{NS}/Ω), pounds-force[1, 2, 3, 4, 5]

Steel Fu = 45 ksi, Applied Factor of Safety, Ω=3.0														
Screw Designation	Nominal Diameter (in.)	Design Thickness of Member Not in Contact with the Screw Head (in)	Design Thickness of Member in Contact with the Screw Head (in)											
			0.018	0.024	0.030	0.036	0.048	0.060	0.075	0.105	0.125	0.187	0.250
10-16	0.190	0.018	66	66	66	66	66	66	66	66	66		
		0.024	102	102	102	102	102	102	102	102	102		
		0.030	111	143	143	143	143	143	143	143	143		
		0.036	120	152	185	188	188	188	188	188	188		
		0.048	139	168	199	228	289	289	289	289	289		
		0.060	139	185	213	239	327	404	404	404	404		
		0.075	139	185	231	251	337	427	564	564	564		
		0.105	139	185	231	277	356	436	570	808	808		
		0.125	139	185	231	277	369	442	571	808	962		
12-14 12-24	0.216	0.018	71	71	71	71	71	71	71	71	71	71	71
		0.024	109	109	109	109	109	109	109	109	109	109	109
		0.030	125	152	152	152	152	152	152	152	152	152	152
		0.036	136	170	205	200	200	200	200	200	200	200	200
		0.048	157	190	223	253	308	308	308	308	308	308	308
		0.060	157	210	240	266	362	430	430	430	430	430	430
		0.075	157	210	262	282	375	468	601	601	601	601	601
		0.105	157	210	262	315	402	483	624	919	919	919	919
		0.125	157	210	262	315	420	494	629	919	1094	1094	1094
		0.187	157	210	262	315	420	525	642	919	1094	1636	1636
		0.250	157	210	262	315	420	525	656	919	1094	1636	2187
$^1/_4$-14 $^1/_4$-28[6]	0.250	0.018	76	76	76	76	76	76	76	76	76	76	76
		0.024	117	117	117	117	117	117	117	117	117	117	117
		0.030	142	164	164	164	164	164	164	164	164	164	164
		0.036	156	193	215	215	215	215	215	215	215	215	215
		0.048	182	218	253	283	331	331	331	331	331	331	331
		0.060	182	243	276	300	406	463	463	463	463	463	463
		0.075	182	243	304	322	424	521	647	647	647	647	647
		0.105	182	243	304	365	461	544	694	1063	1063	1063	1063
		0.125	182	243	304	365	486	560	703	1063	1266	1266	1266
		0.187	182	243	304	365	486	608	731	1063	1266	1893	1893
		0.250	182	243	304	365	486	608	759	1063	1266	1893	2531

For **SI:** 1 inch = 25.4 mm, 1 lbf = 4.4 N, 1 ksi = 6.89 MPa.

[1]The lower of the allowable shear (bearing) and the allowable fastener shear strength found in Tables 4 and 5, respectively, must be used for design.
[2]ANSI/ASME standard screw diameters were used in the calculations and are listed in the tables.
[3]The allowable bearing capacity for other member thickness can be determined by interpolating within the table.
[4]To calculate LRFD values, multiply values in table by the ASD safety factor of 3.0 and multiply again with the LRFD Φ factor of 0.5.
[5]For F_u = 58 ksi, multiply values by 1.29; for F_u = 65 ksi, multiply values by 1.44.
[6]Shear values do not apply to 5, 6 and 8-inch-long $^1/_4$-28 screws, due to the fact that they are not fully threaded.

TABLE 5—FASTENER STRENGTH OF SCREWS[1, 2, 3, 4, 5]

SCREW DESIGNATION	DIAMETER (in.)	ALLOWABLE FASTENER STRENGTH		NOMINAL FASTENER STRENGTH	
		Tensile, P_{ts}/Ω (lb)	Shear, P_{ss}/Ω (lb)	Tensile, P_{ts} (lb)	Shear, P_{ss} (lb)
10-16	0.190	885	573	2654	1718
12-14	0.216	1184	724	3551	2171
12-24	0.216	1583	885	4750	2654
$^1/_4$-14	0.250	1605	990	4816	2970
$^1/_4$-28	0.250	1922	1308	5767	3925

For **SI:** 1 inch = 25.4 mm, 1 lbf = 4.4 N, 1 ksi = 6.89 MPa.

[1]For tension connections, the least of the allowable pull-out, pullover, and fastener tension strength found in Tables 2, 3, and 5, respectively, must be used for design.
[2]For shear connection, the lower of the allowable shear (bearing) and the allowable fastener shear strength found in Table 4 and 5, respectively, must be used for design.
[3]See Section 4.1 for fastener spacing and end distance requirements.
[4]Nominal strengths are based on laboratory tests;
[5]To calculate LRFD values, multiply nominal strength values by the LRFD Φ factor of 0.5.